LSLV

iG5A

0.4~1.5kW(0.5~2HP) 1-phase 200~230Volts
0.4~22kW(0.5~30HP) 3-Phase 200~230Volts
0.4~22kW(0.5~30HP) 3-Phase 380~480Volts

LSIS

Drive
STARVERT iG5A

LS Starvert iG5A is very competitive in its price and shows an upgraded functional strength. User-friendly interface, extended drive ranges up to 22kW, superb torque competence and small size of iG5A provides an optimum use environment.

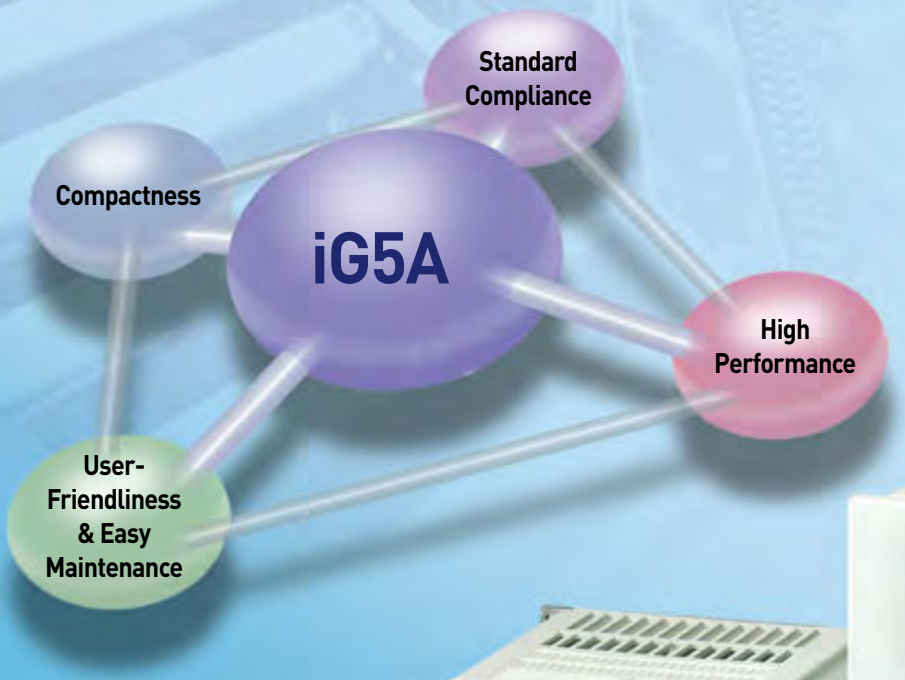

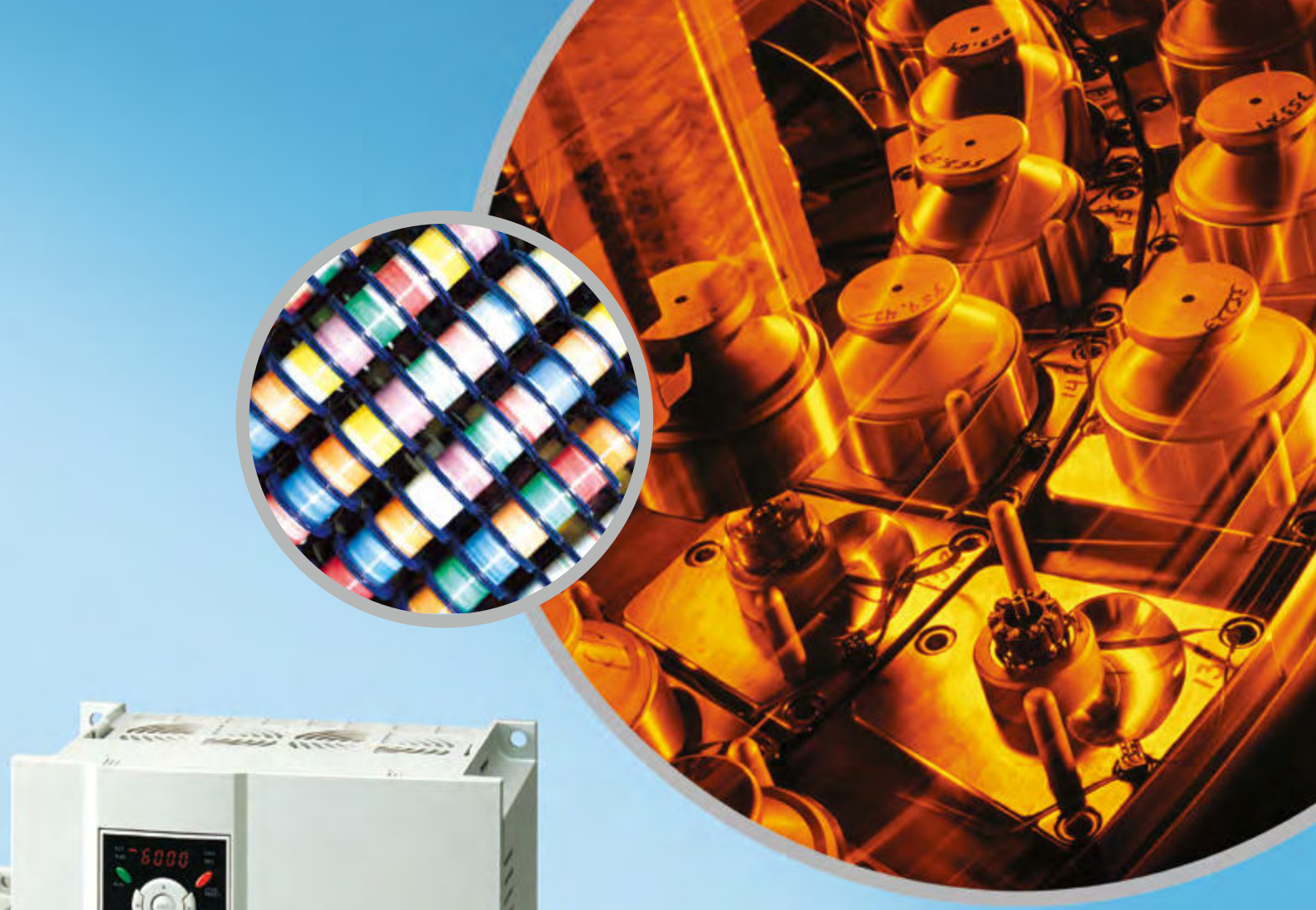

Contents

Powerful & Upgraded Performance

iG5A provides sensorless vector control, PID control, and ground-fault protection through powerful built-in functions.

Sensorless Vector Control

The built-in sensorless vector control provides the superb speed control and powerful high torque.

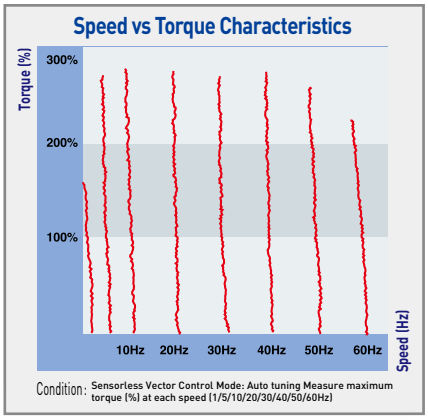

Ground-fault Protection During Running

The ground-fault protection of output terminal is possible during running.

Analog Control From -10V to 10V

Inputting analog signals from -10V to 10V provides user-friendly operation.

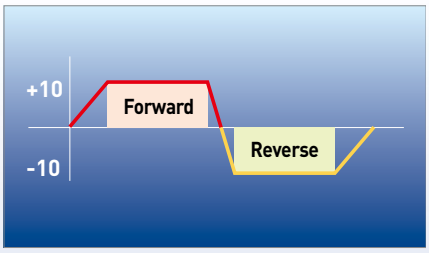

Built-in PID Control

The built-in PID function enables to control flow-rate, oil-pressure, temperature, etc without any extra controller.

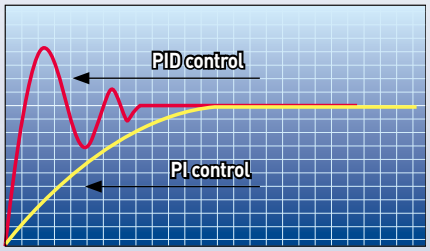

Built-in Dynamic Braking Circuit

The built-in dynamic braking circuit minimizes deceleration time via braking resistors.

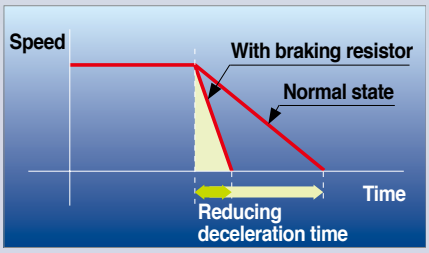

Built-in 485 Communication

The built-in RS-485 communication supports remote control and monitoring between iG5A and other equipment.

Wide Product Range

iG5A consists of the product range from 0.4 to 22KW.

RS-485 Communication

Connected to PC

Monitoring

- Checking operation status (Voltage, Current, Frequency, etc)
- Checking modified parameters
- Windows support

Remote Control

- Convenient remote control to modify operation status (Forward/Reverse operation, Frequency, etc)
- Easy parameter setting
- Available to control up to 31 Drives
- RS-485, Modbus communication

Connected to XGT Panel

Monitoring

- Checking operation time
- Automatic list-up of trip record
- Language support (Korean, English, Chinese)

Remote Control

- Convenient remote control to modify operation status (Forward/Reverse operation, Frequency, etc)
- Easy parameter setting
- Available to control up to 31 Drives
- RS-485, Modbus communication

User-Friendly Interface & Easy Maintenance

The parameter setting becomes easier by adopting the 4 directions key. And iG5A supports easy maintenance via diagnosis and fan changeable structure.

Diagnosis of Output Module

Through easy parameter setting, iG5A can diagnose the status of output module.

Easy Change of Fan

iG5A is designed to be the fan changeable structure in preparation for a fan breakdown.

Cooling Fan Control

By controlling the cooling fan, iG5A provides a virtually quiet environment according to the status of operation.

User-Friendly Interface

The 4 directions key provides easy handling and monitoring.

External Loader (Optional)

The external loader away from a panel enables to control and monitor conveniently. And the parameters made by external loader can be copied and applicable to other Drives.

Model Name	Remarks
INV, REMOTE KPD 2M (SV-iG5A)	2m
INV, REMOTE KPD 3M (SV-iG5A)	3m
INV, REMOTE KPD 5M (SV-iG5A)	5m

Compact Size

The compact size achieves cost-efficiency and various applications.

Same height from 0.4 to 4.0kW (128mm)

Global Standard Compliance CE UL

Global Standard

iG5A series complies with CE and UL standards.

PNP/NPN Input

Both PNP and NPN inputs become possible and these enable to use the outer power.
To do so, users will be given wider choices of selecting the ontroller.

Model & Type

Applicable Motor Ranges	1 Phase 200V	3 Phase 200V	3 Phase 400V
0.4kW (0.5HP)	SV004iG5A-1	SV004iG5A-2	SV004iG5A-4
0.75kW (1HP)	SV008iG5A-1	SV008iG5A-2	SV008iG5A-4
1.5kW (2HP)	SV015iG5A-1	SV015iG5A-2	SV015iG5A-4
2.2kW (3HP)		SV022iG5A-2	SV022iG5A-4
3.7kW (5HP)		SV037iG5A-2	SV037iG5A-4
4.0kW (5.4HP)		SV040iG5A-2	SV040iG5A-4
5.5kW (7.5HP)		SV055iG5A-2	SV055iG5A-4
7.5kW (10HP)		SV075iG5A-2	SV075iG5A-4
11.0kW (15HP)		SV110iG5A-2	SV110iG5A-4
15.0kW (20HP)		SV150iG5A-2	SV150iG5A-4
18.5kW (25HP)		SV185iG5A-2	SV185iG5A-4
22.0kW (30HP)		SV220iG5A-2	SV220iG5A-4

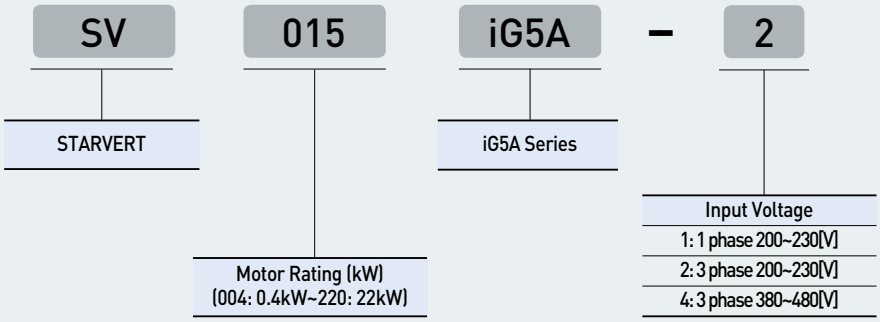

Standard Specifications

1 Phase 200V

SV □□□ iG5A-1□□		004	008	015
Max. Capacity[1]	(HP)	0.5	1	2
	(kW)	0.4	0.75	1.5
Output Rating	Capacity (kVA)[2]	0.95	1.9	3.0
	FLA (A)[3]	2.5	5	8
	Max Frequency	400 [Hz][4]		
	Max Voltage	3 phase 200~230V[5]		
Input Rating	Rated Voltage	1phase 200~230 VAC (+10%, -15%)		
	Rated Frequency	50 ~ 60 [Hz] (±5%)		
Cooling Method		Forced air cooling		
Weight (kg)		0.76	1.12	1.84

3 Phase 200V

SV □□□ iG5A-2□□		004	008	015	022	037	040	055	075	110	150	185	220
Max. Capacity[1]	(HP)	0.5	1	2	3	5	5.4	7.5	10	15	20	25	30
	(kW)	0.4	0.75	1.5	2.2	3.7	4.0	5.5	7.5	11	15	18.5	22
Output Rating	Capacity (kVA)[2]	0.95	1.9	3.0	4.5	6.1	6.5	9.1	12.2	17.5	22.9	28.2	33.5
	FLA (A)[3]	2.5	5	8	12	16	17	24	32	46	60	74	88
	Max Frequency	400 [Hz][4]											
	Max Voltage	3 phase 200~230V[5]											
Input Rating	Rated Voltage	3 phase 200~230 (+10%, -15%)											
	Rated Frequency	50~60 [Hz] (±5%)											
Cooling Method		N/C[6]	Forced air cooling										
Weight (kg)		0.76	0.77	1.12	1.84	1.89	1.89	3.66	3.66	9.0	9.0	13.3	13.3

3 Phase 400V

SV □□□ iG5A-4□□		004	008	015	022	037	040	055	075	110	150	185	220
Max. Capacity[1]	(HP)	0.5	1	2	3	5	5.4	7.5	10	15	20	25	30
	(kW)	0.4	0.75	1.5	2.2	3.7	4.0	5.5	7.5	11	15	18.5	22
Output Rating	Capacity (kVA)[2]	0.95	1.9	3.0	4.5	6.1	6.9	9.1	12.2	18.3	22.9	29.7	34.3
	FLA (A)[3]	1.25	2.5	4	6	8	9	12	16	24	30	39	45
	Max Frequency	400 [Hz][4]											
	Max Voltage	3 phase 380~480V[5]											
Input Rating	Rated Voltage	3 phase 380~480 VAC (+10%, -15%)											
	Rated Frequency	50~60 [Hz] (±5%)											
Cooling Method		N/C[6]	Forced air cooling										
Weight (kg)		0.76	0.77	1.12	1.84	1.89	1.89	3.66	3.66	9.0	9.0	13.3	13.3

1) Indicate the maximum applicable motor capacity when using 4 pole LS standard motor.
2) Rated capacity is based on 220V for 200V series and 440V for 400V series.
3) Refer to 15-3 of user's manual when carrier frequency setting (39) is above 3kHz.
4) Max. frequency setting range is extended to 300Hz when H40 (Control mode select) is set to 3 (Sensorless vector control).
5) Max. output voltage cannot be higher than the input voltage. It can be programmable below input voltage.
6) Self-Cooling

Standard Specifications

Control	Control Method		V/F, Sensorless vector control
	Frequency Setting Resolution		Digital command: 0.01Hz Analog command: 0.06Hz (Max. freq.: 60Hz)
	Frequency Accuracy		Digital command: 0.01% of Max. output frequency Analog command: 0.1% of Max. output frequency
	V/F Pattern		Linear, Squared, User V/F
	Overload Capacity		150% per 1 min.
	Torque Boost		Manual/Auto torque boost
	Dynamic Braking	Max. Braking Torque	20% [1]
		Max. Duty	150% when using optional DB resistor [2]

Operation	Operation Mode			Keypad/ Terminal/Communication option/Remote keypad selectable
	Frequency Setting			Analog: 0~10V, -10~10V, 0~20mA Digital: Keypad
	Operation Features			PID, Up-down, 3-wire
	Input	Multi-Function Terminal P1~P8		NPN/PNP selectable
				FWD/REV RUN, Emergency stop, Fault reset, Jog operation, Multi-step Frequency-High, Mid, Low, Multi-step Accel/Decel-High, Mid, Low, DC braking at stop, 2nd motor select, Frequency UP/Down, 3-wire operation, External trip A, B, PID-Drive (V/F) operation bypass, Option-drive (V/F) operation bypass, Analog Hold, Accel/Decel stop
	Output	Open Collector Terminal	Fault output and drive status output	Less than DC 26V, 100mA
		Multi-Function Relay		(N.O., N.C.) Less than AC 250V, 1A; Less than DC 30V, 1A
		Analog Output (AM)		0~10Vdc (less than 10mA): Output freq, Output current, Output voltage, DC link selectable

Protective Function	Trip	Over voltage, Under voltage, Over current, Ground fault current detection, Drive overheat, Motor overheat, Output phase open, Overload protection, Communication error, Loss of speed command, Hardware fault, Fan trip
	Alarm	Stall prevention, Overload
	Momentary Power Loss	Below 15 msec: Continuous operation (Should be within rated input voltage, rated output power.) Above 15 msec: Auto restart enable

Environment	Protection Degree	IP 20, NEMA1 (Ambient Temperature 40°C) [3]
	Ambient Temp	-10℃~50℃
	Storage Temp	-20℃~65℃
	Humidity	Below 90% RH (No condensation)
	Altitude/Vibration	Below 1,000m (From 1000 to 4000m, the rated input voltage and rated output current of the drive must be derated by 1% for every 100m.), 5.9m/sec^2 (0.6G)
	Atmospheric Pressure	70~106 kPa
	Location	Protected from corrosive gas, Combustible gas, Oil mist or dust

1) Means average braking torque during Decel to stop of a motor.
2) Refer to Chapter 16 of user's manual for DB resistor specification.
3) UL Type1 with top cover and conduit box installed.

Wiring

0.4~7.5kW

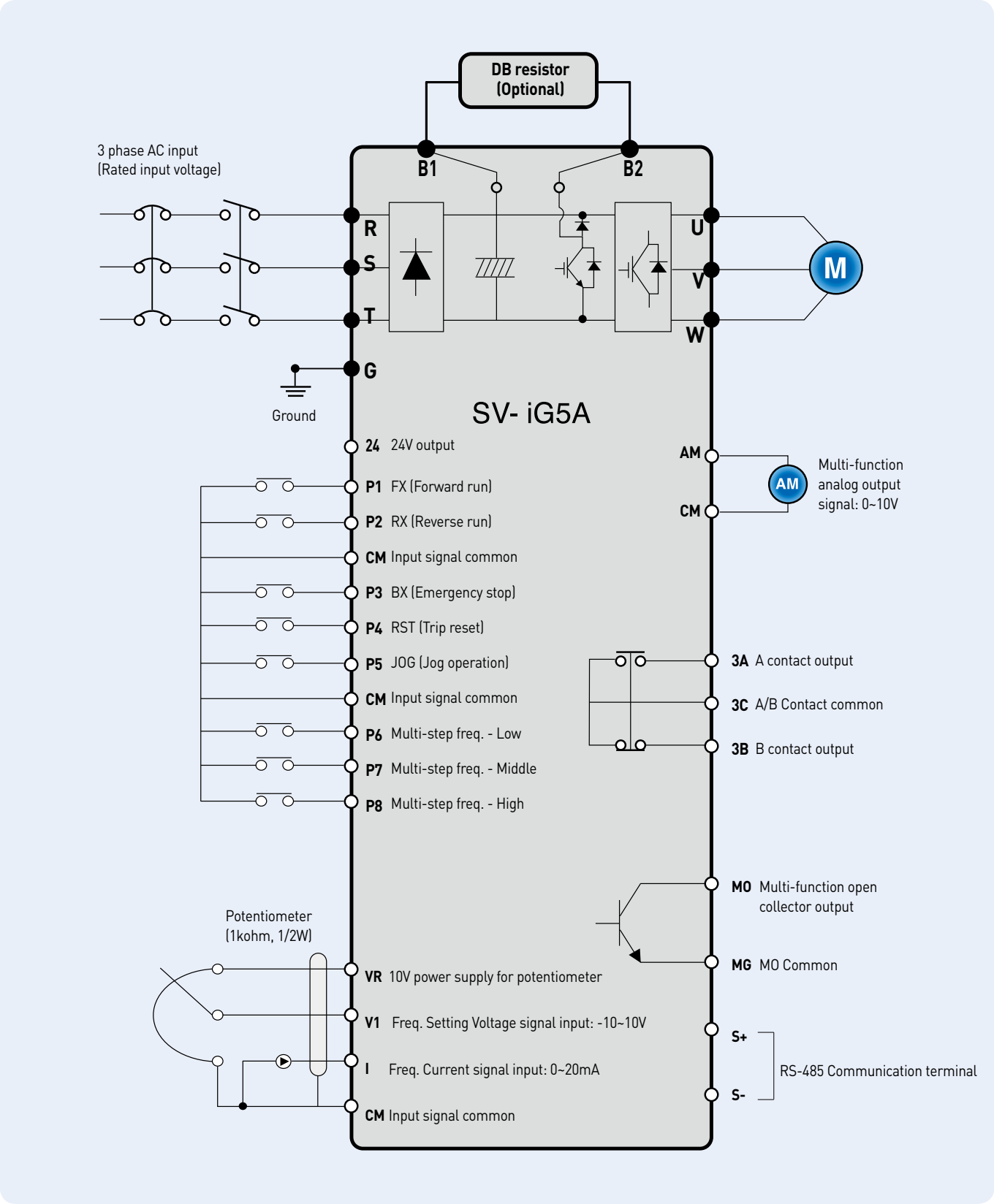

Wiring

11.0~22.0kW

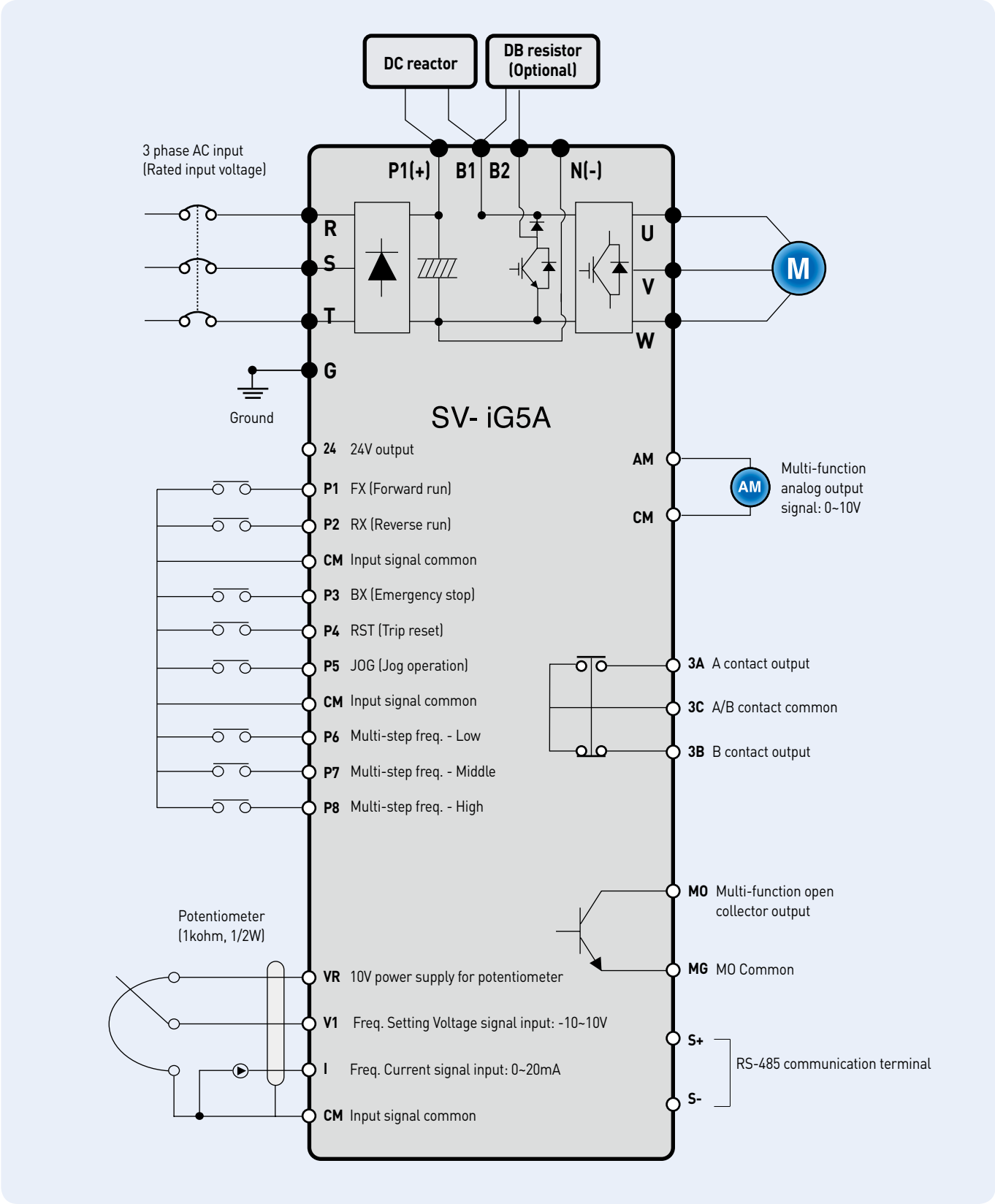

Specifications for Power Terminal Block Wiring

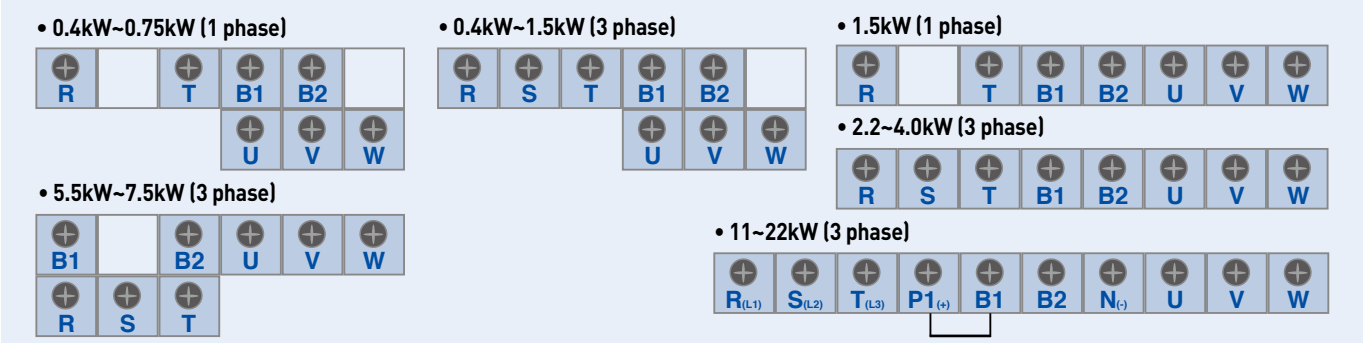

	R, S, T wire		U, V, W wire		Ground Wire		Terminal Screw Size	Screw Torque (kgf.cm) / lb-in
	mm²	AWG	mm²	AWG	mm²	AWG		
SV0004iG5A-1	2	14	2	14	3.5	12	M3.5	10/8.7
SV0008iG5A-1	2	14	2	14	3.5	12	M3.5	10/8.7
SV0015iG5A-1	2	14	2	14	3.5	12	M4	15/13
SV0004iG5A-2	2	14	2	14	3.5	12	M3.5	10/8.7
SV0008iG5A-2	2	14	2	14	3.5	12	M3.5	10/8.7
SV0015iG5A-2	2	14	2	14	3.5	12	M3.5	10/8.7
SV0022iG5A-2	2	14	2	14	3.5	12	M4	15/13
SV0037iG5A-2	3.5	12	3.5	12	3.5	12	M4	15/13
SV0040iG5A-2	3.5	12	3.5	12	3.5	12	M4	15/13
SV0055iG5A-2	5.5	10	5.5	10	5.5	10	M5	32/28
SV0075iG5A-2	8	8	8	8	5.5	10	M5	32/28
SV0110iG5A-2	14	6	14	6	14	6	M6	30.7/26.6
SV0150iG5A-2	22	4	22	4	14	6	M6	30.7/26.6
SV0185iG5A-2	30	2	30	2	22	4	M8	30.6/26.5
SV0220iG5A-2	38	2	30	2	22	4	M8	30.6/26.5
SV0004iG5A-4	2	14	2	14	2	14	M3.5	10/8.7
SV0008iG5A-4	2	14	2	14	2	14	M3.5	10/8.7
SV0015iG5A-4	2	14	2	14	2	14	M4	15/13
SV0022iG5A-4	2	14	2	14	2	14	M4	15/13
SV0037iG5A-4	2	14	2	14	2	14	M4	15/13
SV0040iG5A-4	2	14	2	14	2	14	M4	15/13
SV0055iG5A-4	3.5	12	2	14	3.5	12	M5	32/28
SV0075iG5A-4	3.5	12	3.5	12	3.5	12	M5	32/28
SV0110iG5A-4	5.5	10	5.5	10	8	8	M5	30.7/26.6
SV0150iG5A-4	14	6	8	8	8	8	M5	30.7/26.6
SV0185iG5A-4	14	6	8	8	14	6	M6	30.6/26.5
SV0220iG5A-4	22	4	14	6	14	6	M6	30.6/26.5

Terminal Configuration

Control Terminal Specifications

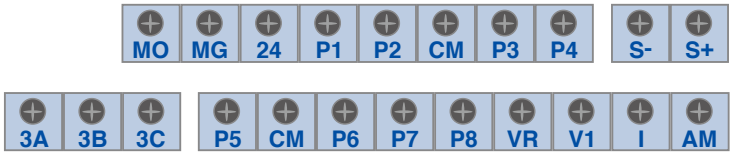

Terminal	Description	Wire Size (mm²)		Screw Size	Torque (Nm) 1)	Specification
		Single Wire	Stranded			
P1~P8	Multi-function input T/M 1-8	1.0	1.5	M2.6	0.4	
CM	Common terminal	1.0	1.5	M2.6	0.4	
VR	Power supply for external potentiometer	1.0	1.5	M2.6	0.4	Output voltage: 12V Max. output current: 100mA Potentiometer: 1~5kohm
V1	Input terminal for voltage operation	1.0	1.5	M2.6	0.4	Max. input voltage: -10V~+10V input
I	Input terminal for current operation	1.0	1.5	M2.6	0.4	0~20mA input Internal resistor: 250ohm
AM	Multi-function analog output terminal	1.0	1.5	M2.6	0.4	Max. output voltage: 11V Max. output current: 10mA
MO	Multi-function terminal for open collector	1.0	1.5	M2.6	0.4	Below DC 26V,100mA
MG	Ground terminal for external power supply	1.0	1.5	M2.6	0.4	
24	24V external power supply	1.0	1.5	M2.6	0.4	Max. output current: 100mA
3A	Multi-function relay output A contact	1.0	1.5	M2.6	0.4	Below AC 250V, 1A
3B	Multi-function relay output B contact	1.0	1.5	M2.6	0.4	Below DC 30V, 1A
3C	Common for multi-function relays	1.0	1.5	M2.6	0.4	

1) Use the recommended tightening torque when securing terminal screws.
※ When you use external power supply (24V) for multi-function input terminal (P1~P8), apply voltage higher than 12V to activate.
※ Tie the control wires more than 15cm away from the control terminals. Otherwise, it interferes front cover reinstallation.

Keypad Features

	Display	Term	Description
KEY	RUN	Run key	Run command
	STOP/RESET	STOP/RESET key	STOP: Stop command during operation, RESET:Reset command when a fault occurs.
	▲	Up key	Used to scroll through codes or increase parameter value
	▼	Down key	Used to scroll through codes or decrease parameter value
	▶	Right key	Used to jump to other parameter groups or move a cursor to the right to change the parameter value
	◀	Left key	Used to jump to other parameter groups or move a cursor to the left to change the parameter value
	●	Enter key	Used to set the parameter value or save the changed parameter value
LED [1]	FWD	Forward run	Lit during forward run
	REV	Reverse run	Lit during reverse run
	RUN	Run key	Lit during operation
	SET	Setting	Lit during parameter setting

1) 4 LEDs above are set to blink when a fault occurs.

Dimensions

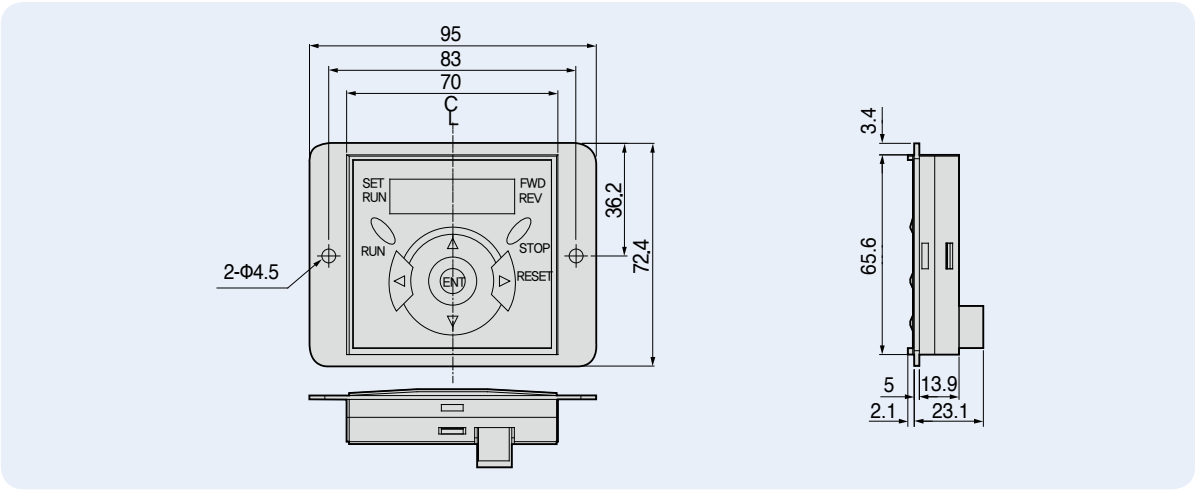

Moving to Other Groups

Parameter Groups

There are 4 different parameter groups in iG5A series as shown below.

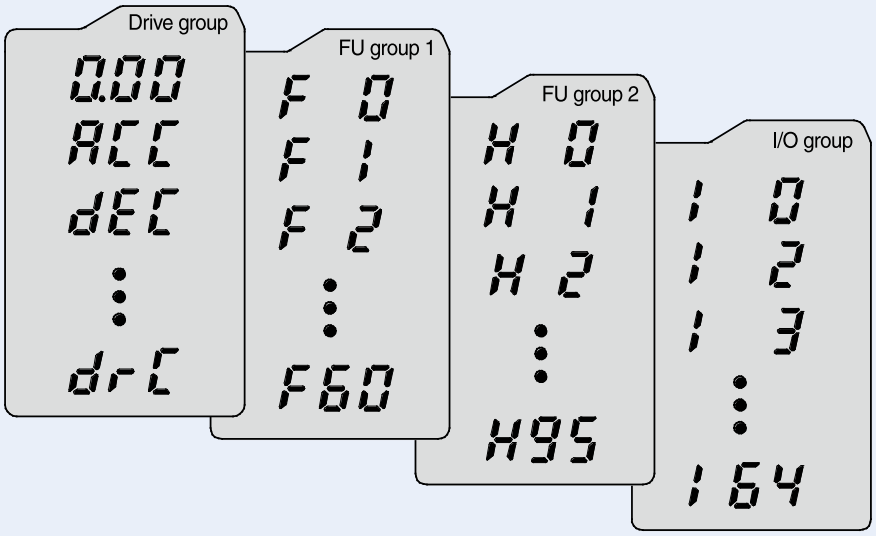

Parameter Group	Description
Drive Group	Basic parameters necessary for the drive to run. Parameters such as Target frequency, Accel/Decel time settable.
Function Group 1	Basic function parameters to adjust output frequency and voltage.
Function Group 2	Advanced function parameters to set parameters for such as PID Operation and second motor operation.
I/O (Input/Output) Group	Parameters necessary to make up a sequence using multi-function input/output terminal.

Moving to Other Groups

Moving to Other Groups Using the Right (▶) key	Moving to Other Groups Using the Left (◀) key
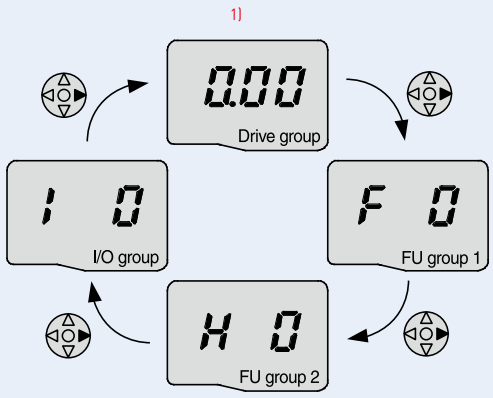	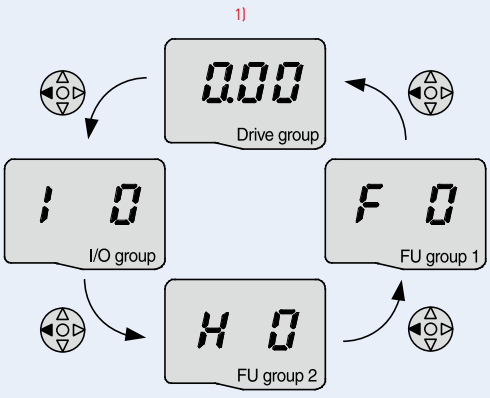

1) Target frequency can be set at 0.0 (the 1st code of drive group). Even though the preset value is 0.0, it is user-settable.
The changed frequency will be displayed after it is changed.

When Changing ACC Time from 5.0 sec to 16.0 sec

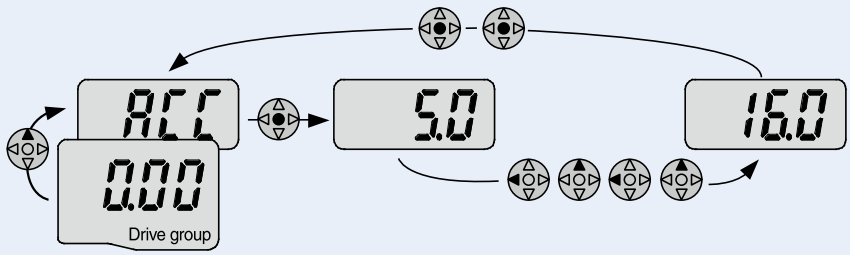

1	0.00	• In the first code "0.00", press the Up (▲) key once to go to the second code.
2	ACC	• ACC [Accel time] is displayed. • Press the Ent (●) key once.
3	5.0	• Preset value is 5.0, and the cursor is in the digit 0. • Press the Left (◀) key once to move the cursor to the left.
4	5.0	• The digit 5 in 5.0 is active. Then press the Up (▲) key once.
5	6.0	• The value is increased to 6.0 • Press the Left (◀) key to move the cursor to the left.
6	0.60	• 0.60 is displayed. The first 0 in 0.60 is active. • Press the Up (▲) key once.
7	16.0	• 16.0 is set. • Press the Ent (●) key once. • 16.0 is blinking. 1) • Press the Ent (●) key once again to return to the parameter name.
8	ACC	• ACC is displayed. Accel time is changed from 5.0 to 16.0 sec.

1) Pressing the Left (◀)/Right (▶)/Up (▲)/Down (▼) key while a cursor is blinking will cancel the parameter value change.
Pressing the Ent (●) key in this status will enter the value into memory.

※ In step 7, pressing the Left (◀) or Right (▶) key while 16.0 is blinking will disable the setting.

Code Change in Drive Group

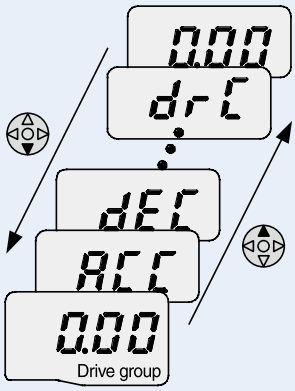

1	0.00	• In the 1st code in Drive group "0.00", press the Up (▲) key once.
2	ACC	• The 2nd code in Drive group "ACC"is displayed. • Press the Up (▲) key once.
3	dEC	• The 3rd code "dEC" in Drive group is displayed. • Keep pressing the Up (▲) key until the last code appears.
4	drC	• The last code in Drive group "drC" is displayed. • Press the Up (▲) key again.
5	0.00	• Return to the first code of Drive group.

• Use down (▼) key for the opposite order.

Trial Run

Multi-step Operation + Run/Stop via FX/RX + Max. Frequency Change

Operation Condition

Operation Command :	Frequency Command :	Max. Frequency Change :
Run/Stop via FX/RX	Multi-step operation [Low (20), Middle (30), High (80)]	From 60Hz to 80Hz

Wiring

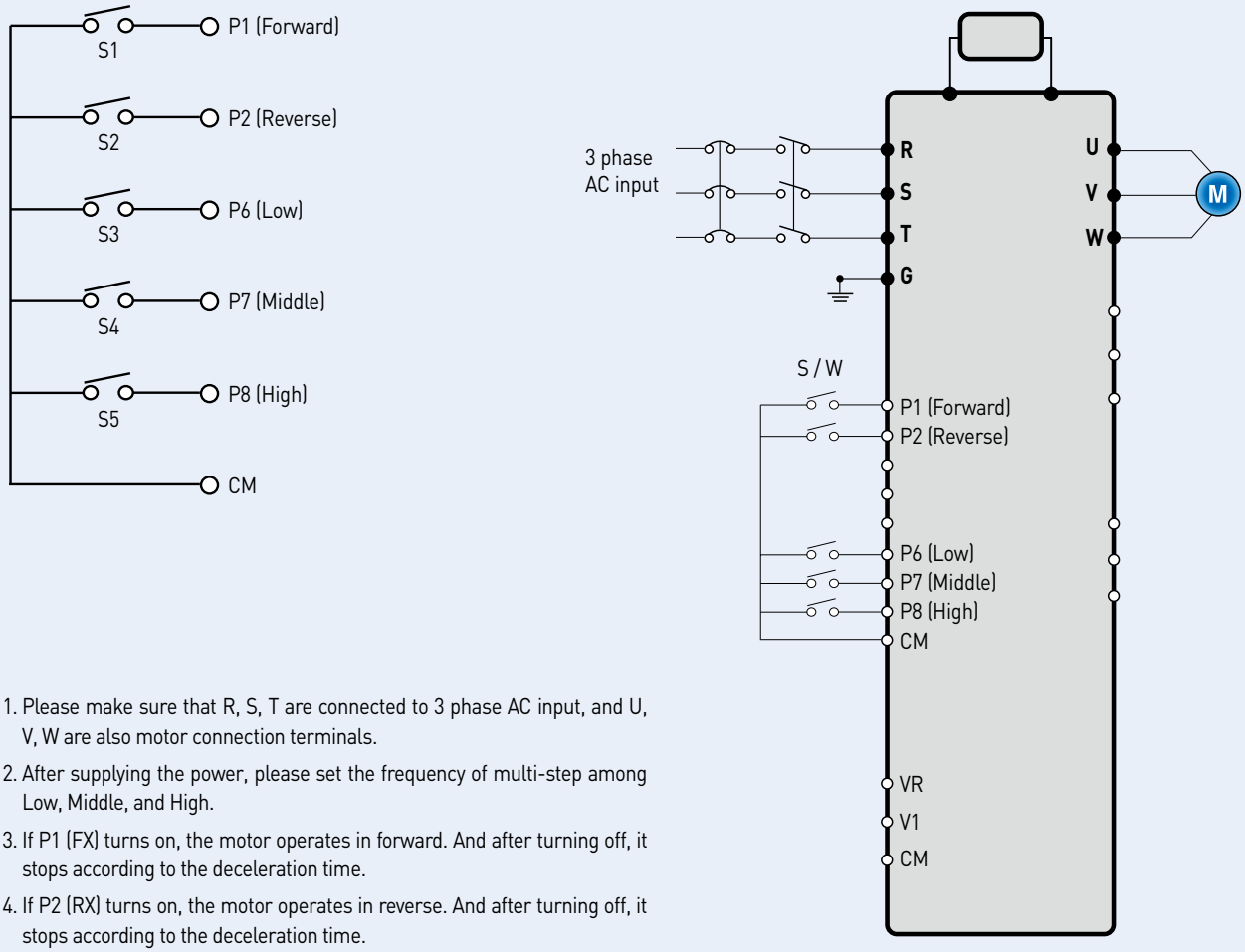

1. Please make sure that R, S, T are connected to 3 phase AC input, and U, V, W are also motor connection terminals.
2. After supplying the power, please set the frequency of multi-step among Low, Middle, and High.
3. If P1 (FX) turns on, the motor operates in forward. And after turning off, it stops according to the deceleration time.
4. If P2 (RX) turns on, the motor operates in reverse. And after turning off, it stops according to the deceleration time.

Parameter Setting

Step	Command	Code	Description	Default	After Change
1	Max. frequency change (FU1)	F21	Change Max. frequency.	60Hz	80Hz
2	Multi-step frequency (DRV)	st1	Set 'Low' step.	10Hz	20Hz
3	Multi-step frequency (DRV)	st2	Set 'Middle' step.	20Hz	30Hz
4	Multi-step frequency (I/O)	I30	Set 'High' step.	30Hz	80Hz
5	Forward run (P1: FX)	I17	The default is FX. This value may change.	FX	FX
6	Reverse run (P2: RX)	I18	The default is RX. This value may change.	RX	RX

Potentiometer (Volume) + Run/Stop via FX/RX + Accel/Decel Time Change

Operation Condition

Operation Command :	Frequency Command :	Accel/Decel Time :
Run/Stop via FX/RX	0~60Hz analog input via potentiometer	Accel-10sec, Decel-20sec

Wiring

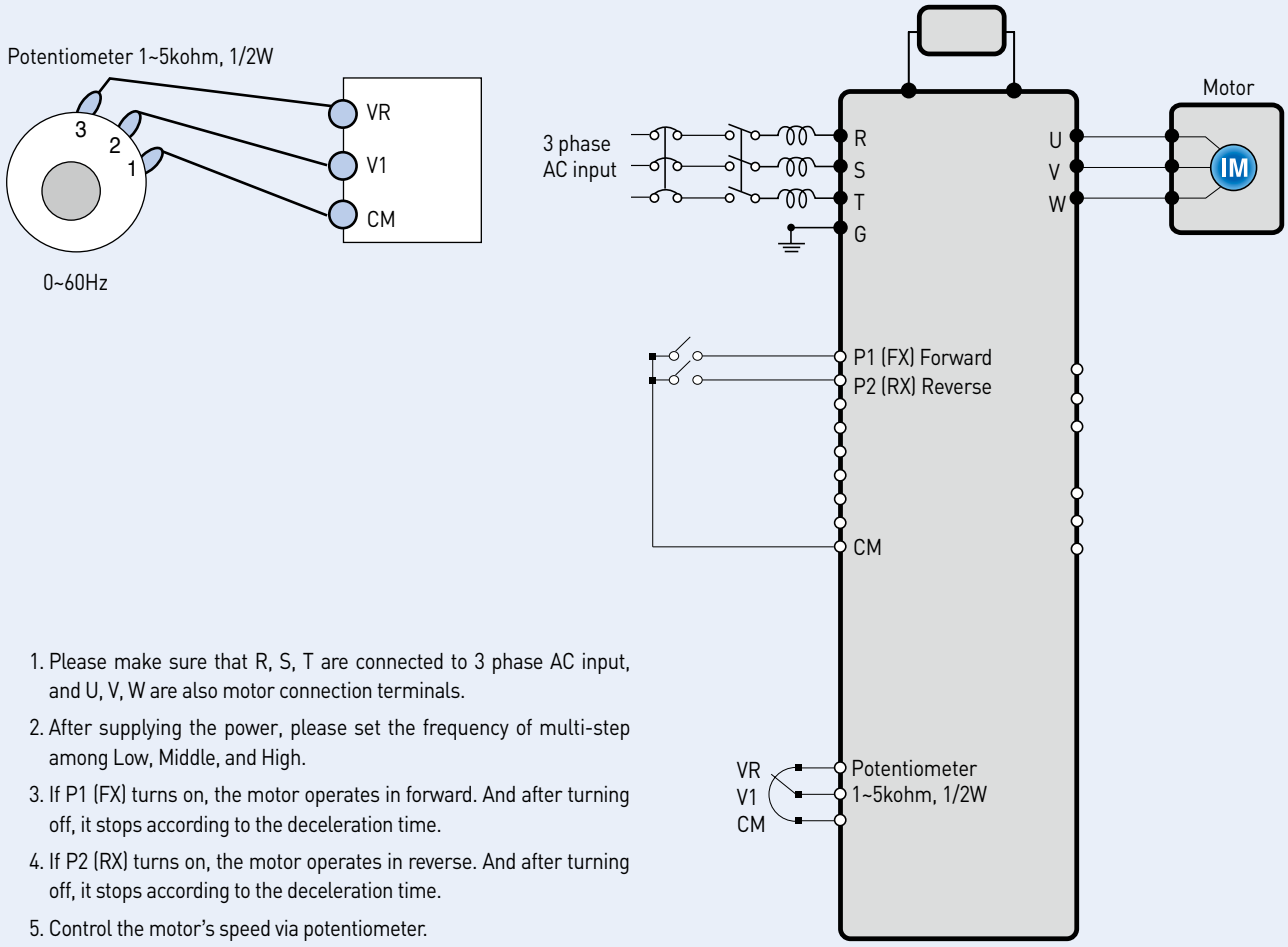

1. Please make sure that R, S, T are connected to 3 phase AC input, and U, V, W are also motor connection terminals.
2. After supplying the power, please set the frequency of multi-step among Low, Middle, and High.
3. If P1 (FX) turns on, the motor operates in forward. And after turning off, it stops according to the deceleration time.
4. If P2 (RX) turns on, the motor operates in reverse. And after turning off, it stops according to the deceleration time.
5. Control the motor's speed via potentiometer.

Parameter Setting

Step	Command	Code	Description	Default	After Change
1	Operation command (DRV group)	Drv	Turn on/off motor via terminal.	1 (FX/RX-1)	1 (FX/RX-1)
2	Analog input (DRV group)	Frq	Change keypad command to analog voltage command.	0 (Keypad-1)	3 (V1: 0~10V)
3	Accel/Decel time (DRV group)	ACC dEC	Set Accel time to 10sec in ACC Set Decel time to 20sec in dEC.	5sec (Accel) 10sec (Decel)	10sec (Accel) 20sec (Decel)
4	Forward run (P1: FX)	I17	The default is FX. This value may change	Fx	Fx
5	Reverse run (P2: RX)	I18	The default is RX. This value may change.	Rx	Rx

Dimensions

SV004iG5A-1 SV004iG5A-2 / SV008iG5A-2, SV004iG5A-4 / SV008iG5A-4

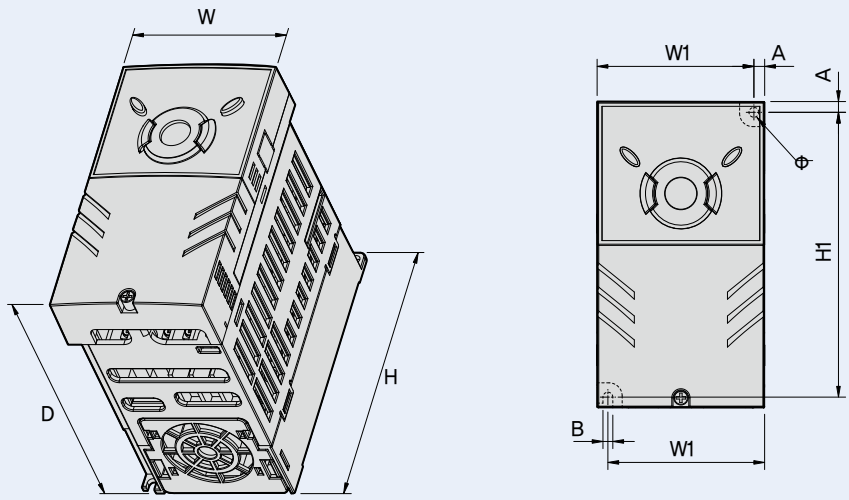

mm (inches)

Drive Model	(kW)	W (mm)	W1 (mm)	H (mm)	H1 (mm)	D (mm)	Φ	A (mm)	B (mm)	(kg)
SV004iG5A-1	0.4	70	65.5	128	119	130	4.0	4.5	4.0	0.76
SV004iG5A-2	0.4	70	65.5	128	119	130	4.0	4.5	4.0	0.76
SV008iG5A-2	0.75	70	65.5	128	119	130	4.0	4.5	4.0	0.77
SV004iG5A-4	0.4	70	65.5	128	119	130	4.0	4.5	4.0	0.76
SV008iG5A-4	0.75	70	65.5	128	119	130	4.0	4.5	4.0	0.77

SV008iG5A-1 / SV015iG5A-2 / SV015iG5A-4

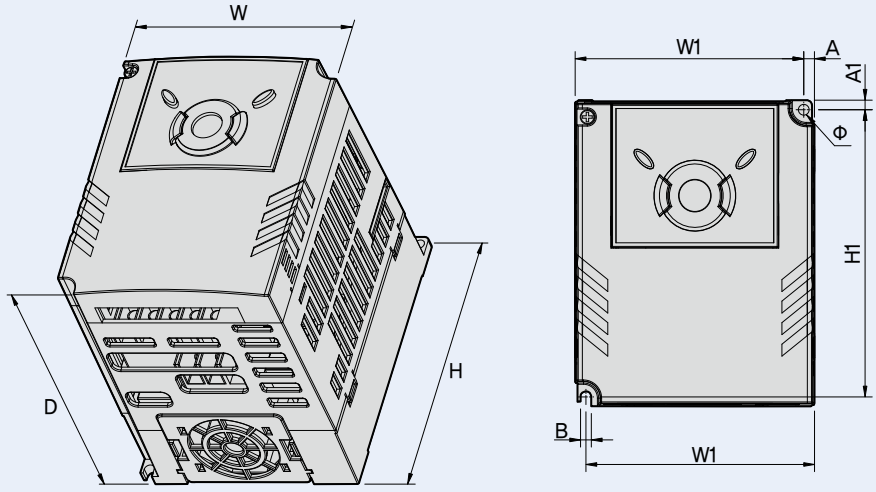

mm (inches)

Drive Model	(kW)	W (mm)	W1 (mm)	H (mm)	H1 (mm)	D (mm)	Φ	A (mm)	B (mm)	(kg)
SV015iG5A-1	0.75	100	95.5	128	120	130	4.5	4.5	4.5	1.12
SV015iG5A-2	1.5	100	95.5	128	120	130	4.5	4.5	4.5	1.12
SV015iG5A-4	1.5	100	95.5	128	120	130	4.5	4.5	4.5	1.12

SV015iG5A-1 / SV022iG5A-2 / SV037iG5A-2 / SV040iG5A-2, SV022iG5A-4 / SV037iG5A-4 / SV040iG5A-4

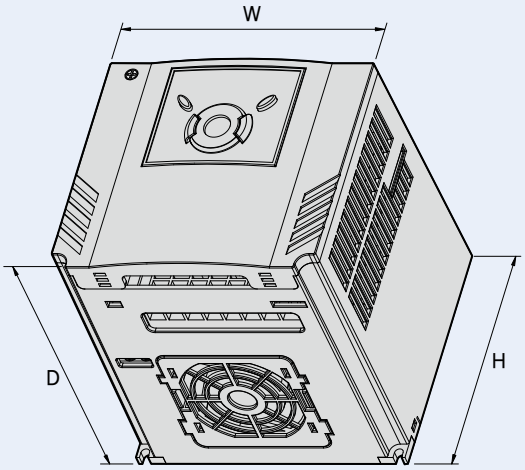

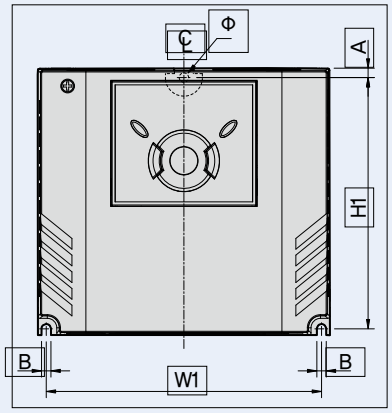

mm (inches)

Drive Model	(kW)	W (mm)	W1 (mm)	H (mm)	H1 (mm)	D (mm)	Φ	A (mm)	B (mm)	(kg)
SV015iG5A-1	1.5	140	132	128	120.5	155	4.5	4.5	4.5	1.84
SV022iG5A-2	2.2	140	132	128	120.5	155	4.5	4.5	4.5	1.84
SV037iG5A-2	3.7	140	132	128	120.5	155	4.5	4.5	4.5	1.89
SV040iG5A-2	4.0	140	132	128	120.5	155	4.5	4.5	4.5	1.89
SV022iG5A-4	2.2	140	132	128	120.5	155	4.5	4.5	4.5	1.84
SV037iG5A-4	3.7	140	132	128	120.5	155	4.5	4.5	4.5	1.89
SV040iG5A-4	4.0	140	132	128	120.5	155	4.5	4.5	4.5	1.89

SV055iG5A-2 / SV075iG5A-2, SV055iG5A-4 / SV075iG5A-4

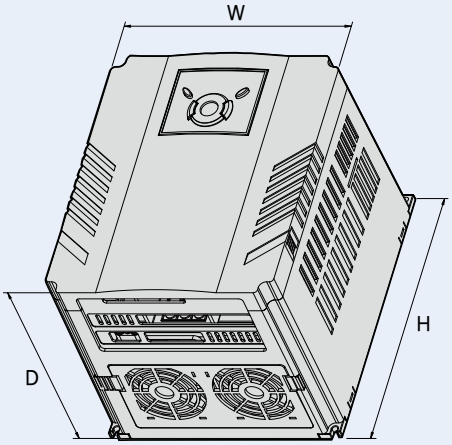

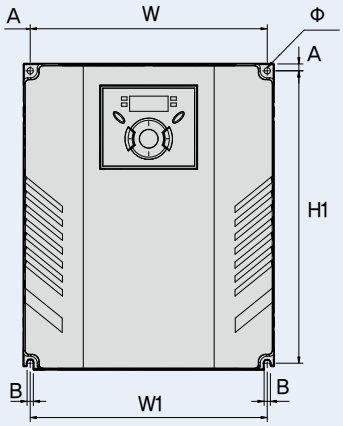

mm (inches)

Drive Model	(kW)	W (mm)	W1 (mm)	H (mm)	H1 (mm)	D (mm)	Φ	A (mm)	B (mm)	(kg)
SV055iG5A-2	5.5	180	170	220	210	170	4.5	5	4.5	3.66
SV075iG5A-2	7.5	180	170	220	210	170	4.5	5	4.5	3.66
SV055iG5A-4	5.5	180	170	220	210	170	4.5	5	4.5	3.66
SV075iG5A-4	7.5	180	170	220	210	170	4.5	5	4.5	3.66

Dimensions

SV110iG5A-2 / SV150iG5A-2 / SV110iG5A-4 / SV150iG5A-4

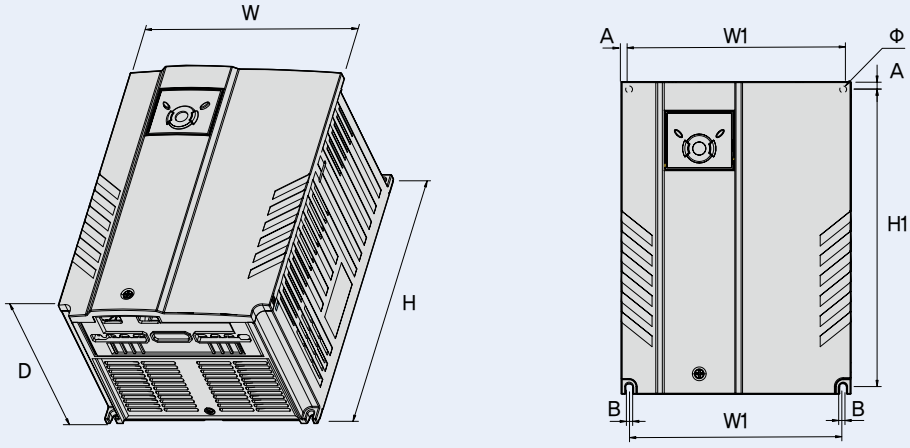

mm (inches)

Drive Model	(kW)	W (mm)	W1 (mm)	H (mm)	H1 (mm)	D (mm)	Φ	A (mm)	B (mm)	(kg)
SV110iG5A-2	11.0	235	219	320	304	189.5	7.0	8.0	7.0	9.00
SV150iG5A-2	15.0	235	219	320	304	189.5	7.0	8.0	7.0	9.00
SV110iG5A-4	11.0	235	219	320	304	189.5	7.0	8.0	7.0	9.00
SV150iG5A-4	15.0	235	219	320	304	189.5	7.0	8.0	7.0	9.00

SV0185iG5A-2 / SV0220iG5A-2 / SV0185iG5A-4 / SV0220iG5A-4

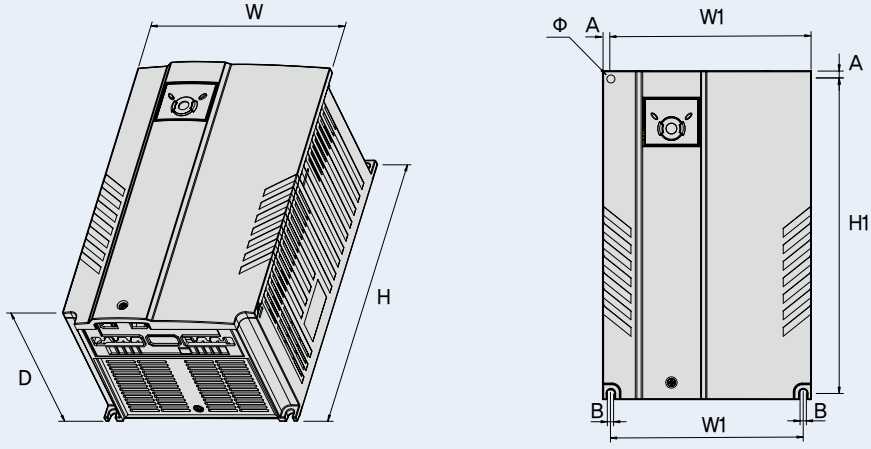

mm (inches)

Drive Model	(kW)	W (mm)	W1 (mm)	H (mm)	H1 (mm)	D (mm)	Φ	A (mm)	B (mm)	(kg)
SV185iG5A-2	18.5	260	240	410	392	208.5	10.0	10.0	10.0	13.3
SV220iG5A-2	22.0	260	240	410	392	208.5	10.0	10.0	10.0	13.3
SV185iG5A-4	18.5	260	240	410	392	208.5	10.0	10.0	10.0	10.0
SV220iG5A-4	22.0	260	240	410	392	208.5	10.0	10.0	10.0	10.0

Braking Resistors and Peripheral Devices

Braking Resistors

1) The wattage is based on Enable Duty (%ED) with continuous braking time 15sec.

Voltage	Drive	100% braking		150% braking	
		Resistor [Ω]	Watt [W] 1)	Resistor [Ω]	Watt [W] 1)
200V Series	0.4	400	50	300	100
	0.75	200	100	150	150
	1.5	100	200	60	300
	2.2	60	300	50	400
	3.7	40	500	33	600
	5.5	30	700	20	800
	7.5	20	1,000	15	1,200
	11.0	15	1,400	10	2,400
	15.0	11	2,000	8	2,400
	18.5	9	2,400	5	3,600
	22.0	8	2,800	5	3,600
400V Series	0.4	1,800	50	1,200	100
	0.75	900	100	600	150
	1.5	450	200	300	300
	2.2	300	300	200	400
	3.7	200	500	130	600
	5.5	120	700	85	1,000
	7.5	90	1,000	60	1,200
	11.0	60	1,400	40	2,000
	15.0	45	2,000	30	2,400
	18.5	35	2,400	20	3,600
	22.0	30	2,800	20	3,600

Breakers

Note) 1. The capacity of the MCCB should be 1.5 to 2 times the rated output current of the drive.
2. Use an MCCB keep the drive from faulting out instead of using overheat protection (150% for one minute at the rated output current.)
3. In case magnetic contactor is used on single-phase product, wire R and T phases.

Voltage	Capacity [kW]	Circuit Breaker (MCCB)				Leakage Breaker (ELCB)		Magnetic Contactor (MC)	
		Model	Rated Current [A]	Model	Rated Current [A]	Model	Rated Current [A]	Model	Rated Current [A]
1-Phase 200V	0.4	ABS33c	5	UTE100	15	EBS33c	5	MC-6a	9
	0.75		10		15		10	MC9a, MC9b	11
	1.5		15		15		15	MC18a, MC18b	18
3-Phase 200V	0.4	ABS33c	5	UTE100	15	EBS33c	5	MC6a	9
	0.75		10		15		10	MC9a, MC9b	11
	1.5		15		15		15	MC18a, MC18b	18
	2.2		20		20		20	MC22b	22
	3.7		30		30		30	MC32a	32
	4		30		30		30		32
	5.5	ABS53c	50		50	EBS53c	50	MC50a	55
	7.5	ABS63c	60		60	EBS63c	60	MC65a	65
	11	ABS103c	100		90	EBS103c	100	MC85a	85
	15		125	UTS150	125		125	MC130a	130
	18.5	ABS203c	150		150	EBS203c	150	MC150a	150
	22		175	UTS250	175		175	MC185a	185
3-Phase 400V	0.4		3	UTE100	15	EBS33c	5	MC6a	7
	0.75		5		15		5		7
	1.5		10		15		10	MC9a, MC9b	9
	2.2		10		15		10	MC12a, MC12b	12
	3.7		15		15		15	MC18a, MC18b	18
	4	ABS33c	20		20		20	MC18a, MC18b	18
	5.5		30		30		30	MC22b	22
	7.5		30		30		30	MC32a	32
	11	ABS53c	50		50	EBS53c	50	MC50a	50
	15	ABS63c	60		60	EBS63c	60	MC65a	65
	18.5	ABS103c	75		80	EBS103c	75	MC75a	75
	22		100		90		100	MC85a	85

Braking Resistors and Peripheral Devices

Fuses & AC Reactors

Model	AC External Fuse		AC Reactor	DC Reactor
	Current [A]	Voltage [V]		
004iG5A-1	10 A	600V	4.20 mH, 3.5 A	-
008iG5A-1	10 A	600V	2.13 mH, 5.7 A	-
015iG5A-1	15 A	600V	1.20 mH, 10 A	-
004iG5A-2	10 A	600V	4.20 mH, 3.5 A	-
008iG5A-2	10 A	600V	2.13 mH, 5.7 A	-
015iG5A-2	15 A	600V	1.20 mH, 10 A	-
022iG5A-2	25 A	600V	0.88 mH, 14 A	-
037iG5A-2	30 A	600V	0.56 mH, 20 A	-
040iG5A-2	30 A	600V	0.56 mH, 20 A	-
055iG5A-2	30 A	600V	0.39 mH, 30 A	-
075iG5A-2	50 A	600V	0.28 mH, 40 A	-
110iG5A-2	70 A	600V	0.20 mH, 59 A	0.74 mH, 56 A
150iG5A-2	100 A	600V	0.15 mH, 75 A	0.57 mH, 71 A
185iG5A-2	100 A	600V	0.12 mH, 96 A	0.49 mH, 91 A
220iG5A-2	125 A	600V	0.10 mH, 112 A	0.42 mH, 107 A
004iG5A-4	5 A	600V	18.0 mH, 1.3 A	-
008iG5A-4	10 A	600V	8.63 mH, 2.8 A	-
015iG5A-4	10 A	600V	4.81 mH, 4.8 A	-
022iG5A-4	10 A	600V	3.23 mH, 7.5 A	-
037iG5A-4	20 A	600V	2.34 mH, 10 A	-
040iG5A-4	20 A	600V	2.34 mH, 10 A	-
055iG5A-4	20 A	600V	1.22 mH, 15 A	-
075iG5A-4	30 A	600V	1.14 mH, 20 A	-
110iG5A-4	35 A	600V	0.81 mH, 30 A	2.76 mH, 29 A
150iG5A-4	45 A	600V	0.61 mH, 38 A	2.18 mH, 36 A
185iG5A-4	60 A	600V	0.45 mH, 50 A	1.79 mH, 48 A
220iG5A-4	70 A	600V	0.39 mH, 58 A	1.54 mH, 55 A

Function List

Drive Group

LED Display	Address for Communication	Parameter Name	Min/Max Range	Description	Factory Defaults	Adj. during Run
0.00	A100	[Frequency command]	0 ~ 400 [Hz]	This parameter sets the frequency that the drive is commanded to output. During stop: frequency command During eun: output frequency During multi-step operation: Multi-step frequency 0. It cannot be set greater than F21- [Max frequency].	0.00	O
ACC	A101	[Accel time]	0 ~ 6000 [Sec]	During multi-accel/decel operation, this parameter serves as accel/decel time 0.	5.0	O
dEC	A102	[Dacel time]			10.0	O
drv	A103	[Drive mode]	0 ~ 3	0: Run/stop via run/Stop key on the keypad 1: Terminal operation — FX: Motor forward run; RX: Motor reverse run 2: Terminal operation — FX: Run/Stop enable; RX: Reverse rotation select 3: RS485 communication 4: Set to Field Bus communication [1]	1	X
Frq	A104	[Frequency setting method]	0 ~ 7	0: Digital — Keypad setting 1 1: Digital — Keypad setting 2 2: Analog — V1 1: -10 ~ +10 [V] 3: Analog — V1 2: 0 ~ +10 [V] 4: Analog — Terminal I: 0 ~ 20 [mA] 5: Analog — Terminal V1 setting 1 + Terminal I 6: Analog — Terminal V1 setting 2 + Terminal I 7: RS485 communication 8: Digital volume 9: Set to field bus communication [1]	0	X
St1	A105	[Multi-step frequency 1]	0 ~ 400 [Hz]	Sets multi-step frequency 1 during multi-step operation.	10.00	O
St2	A106	[Multi-step frequency 2]		Sets multi-step frequency 2 during multi-step operation.	20.00	O
St3	A107	[Multi-step frequency 3]		Sets multi-step frequency 3 during multi-step operation.	30.00	O
Cur	A108	[Output current]		Displays the output current to the motor.	-	-
rPM	A109	[Motor RPM]		Displays the number of Motor RPM.	-	-
dCL	A10A	[Drive DC link voltage]		Displays DC link voltage inside the drive.	-	-
vOL	A10B	[User display select]		This parameter displays the item selected at H73- [Monitoring item select]. vOL: Output voltage POr: Output power tOr: Torque	vOL	-

1) This function can be available with iG5A Communication Option Module..

Function List

Drive Group

LED Display	Address for Communication	Parameter Name	Min/Max Range	Description			Factory Defaults	Adj. during Run
nOn	A10C	[Fault display]		Displays the types of faults, frequency and operating status at the time of the fault			-	-
drC	A10D	[Direction of motor rotation select]	F, r	Sets the direction of motor rotation when drv - [Drive mode] is set to either 0 or 1.			F	O
				F	Forward			
				r	Reverse			
drv2	A10E	[Drive mode 2]	0 ~ 3	0	Run/stop via run/stop key on the keypad		10	X
				1	Terminal operation	FX: Motor forward run		
						RX: Motor reverse run		
				2		FX: Run/Stop enable		
						RX: Reverse rotation select		
				3	RS-485 communication			
				4	Set to filed bus communication 3)			
Frq2 1)	A10F	[Frequency setting method 2]	0 ~ 7	0	Digital	Keypad setting 1	00	X
				1		Keypad setting 2		
				2	Analog	V1 1: -10 ~ +10 [V]		
				3		V1 2: 0 ~ +10 [V]		
				4		Terminal I: 0 ~ 20 [mA]		
				5		Terminal V1 setting 1 + Terminal I		
				6		Terminal V1 setting 2+ Terminal I		
				7	RS485 communication			
				8	Digital Volume			
				9	Set to filed bus communication 3)			
rEF 2)	A110	PID control standard value setting	0~400[Hz] or 0~100 [%]	If H58 is 0, it is expressed as a [Hz] unit. If H58 is 1, it is expressed as a [%] unit. In [Hz] unit, you can't set max. frequency more than (F21). In [%] unit, 100% means max. frequency.			0.00	O
Fbk 2)	A111	PID control feedback amount		It indicates a feedback amount in PID control. If H58 is 0, it is expressed as a [Hz] unit. If H58 is 1, it is expressed as a [%] unit.			-	-

1) Only displayed when one of the Multi-function input terminals 1-8 [I17~I24] is set to "22".
2) It is indicated when H49(PID control selection) is 1.
3) This function can be available with iG5A Communication Option Module.

Function group 1

LED Display	Address for Communication	Parameter Name	Min/Max Range	Description		Factory Defaults	Adj. during Run
F0	A200	[Jump code]	0 ~ 71	Sets the parameter code number to jump		1	O
F1	A201	[Forward/ Reverse run disable]	0 ~ 2	0	Fwd and rev run enable	0	X
				1	Forward run disable		
				2	Reverse run disable		
F2	A202	[Accel pattern]	0 ~1	0	Linear	0	X
F3	A203	[Decel pattern]		1	S-curve		

Function Group 1

LED Display	Address for Communication	Parameter Name	Min/Max Range	Description	Factory Defaults	Adj. during Run
F4	A204	[Stop mode select]	0 ~ 3	0 Decelerate to stop 1 DC brake to stop 2 Free run to stop 3 Power braking stop	0	X
F8 1)	A208	[DC Brake start frequency]	0.1 ~ 60 [Hz]	This parameter sets DC brake start frequency. It cannot be set below F23 - [Start frequency].	5.00	X
F9	A209	[DC Brake wait time]	0 ~ 60 [sec]	When DC brake frequency is reached, the drive holds the output for the setting time before starting DC brake.	0.1	X
F10	A20A	[DC Brake voltage]	0 ~ 200 [%]	This parameter sets the amount of DC voltage applied to a motor. It is set in percent of H33 - [Motor rated current].	50	X
F11	A20B	[DC Brake time]	0 ~ 60 [sec]	This parameter sets the time taken to apply DC current to a motor while motor is at a stop.	1.0	X
F12	A20C	[DC Brake start voltage]	0 ~ 200 [%]	This parameter sets the amount of DC voltage before a motor starts to run. It is set in percent of H33 - [Motor rated current].	50	X
F13	A20D	[DC Brake start time]	0 ~ 60 [sec]	DC voltage is applied to the motor for DC Brake start time before motor accelerates.	0	X
F14	A20E	[Time magnetizing a motor]	0 ~ 60 [sec]	This parameter applies the current to a motor for the set time before motor accelerates during Sensorless vector control.	0.1	X
F20	A214	[Jog frequency]	0 ~ 400 [Hz]	This parameter sets the frequency for Jog operation. It cannot be set above F21 - [Max frequency].	10.00	O
F21 2)	A215	[Max frequency]	40 ~ 400 [Hz]	This parameter sets the highest frequency the drive can output. It is frequency reference for Accel/Decel (See H70) Caution Any frequency cannot be set above Max frequency except Base frequency	60.00	X
F22	A216	[Base frequency]	30 ~ 400 [Hz]	The drive outputs its rated voltage to the motor at this frequency (see motor nameplate).	60.00	X
F23	A217	[Start frequency]	0.1 ~ 10 [Hz]	The drive starts to output its voltage at this frequency. It is the frequency low limit.	0.50	X
F24	A218	[Frequency high low limit select]	0 ~ 1	This parameter sets high and low limit of run frequency.	0	X
F25 3)	A219	[Frequency high limit]	0 ~ 400 [Hz]	This parameter sets high limit of the run frequency. It cannot be set above F21 - [Max frequency].	60.00	X
F26	A21A	[Frequency low limit]	0.1 ~ 400 [Hz]	This parameter sets low limit of the run frequency. It cannot be set above F25 - [Frequency high limit] and below F23 - [Start frequency].	0.05	X
F27	A21B	[Torque Boost select]	0 ~ 1	0 Manual torque boost 1 Auto torque boost	0	X
F28	A21C	[Torque boost in forward direction]	0 ~ 15 [%]	This parameter sets the amount of torque boost applied to a motor during forward run. It is set in percent of Max output voltage.	2	X
F29	A21D	[Torque boost in reverse direction]		This parameter sets the amount of torque boost applied to a motor during reverse run. It is set as a percent of Max output voltage.	2	X

1) Only displayed when F 4 is set to 1 (DC brake to stop). 2) If H40 is set to 3 (Sensorless vector), Max. frequency is settable up to 300Hz.
3) Only displayed when F24 (Frequency high/low limit select) is set to 1

Function Group 1

LED Display	Address for Communication	Parameter Name	Min/Max Range	Description	Factory Defaults	Adj. during Run
F30	A21E	[V/F pattern]	0 ~ 2	0 {Linear} 1 {Square} 2 {User V/F}	0	X
F31[1]	A21F	[User V/F frequency 1]	0 ~ 400 [Hz]	It is used only when V/F pattern is set to 2(User V/F) It cannot be set above F21 - [Max frequency].	15,00	X
F32	A220	[User V/F] voltage 1	0 ~ 100 [%]	The value of voltage is set in percent of H70 - [Motor rated voltage]. The values of the lower-numbered parameters cannot be set above those of higher-numbered.	25	X
F33	A221	[User V/F frequency 2]	0 ~ 400 [Hz]		30.00	X
F34	A222	[User V/F voltage 2]	0 ~ 100 [%]		50	X
F35	A223	[User V/F frequency 3]	0 ~ 400 [Hz]		45.00	X
F36	A224	[User V/F voltage 3]	0 ~ 100 [%]		75	X
F37	A225	[User V/F frequency 4]	0 ~ 400 [Hz]		60.00	X
F38	A226	[User V/F voltage 4]	0 ~ 100 [%]		100	X
F39	A227	[Output voltage adjustment]	40 ~ 110 [%]	This parameter adjusts the amount of output voltage. The set value is the percentage of input voltage.	100	X
F40	A228	[Energy-saving level]	0 ~ 30 [%]	This parameter decreases output voltage according to load status.	0	O
F50	A232	[Electronic thermal select]	0 ~ 1	This parameter is activated when the motor is overheated (time-inverse).	0	O
F51[2]	A233	[Electronic thermal level for 1 minute]	50 ~ 200 [%]	This parameter sets max current capable of flowing to the motor continuously for 1 minute. The set value is the percentage of H33 - [Motor rated current]. It cannot be set below F52 - [Electronic thermal level for continuous].	150	O
F52	A234	[Electronic thermal level for continuous]	50 ~ 150 [%]	This parameter sets the amount of current to keep the motor running continuously. It cannot be set higher than F51 - [Electronic thermal level for 1 minute].	100	O
F53	A235	[Motor cooling method]	0 ~ 1	0 Standard motor having cooling fan directly connected to the shaft 1 A motor using a separate motor to power a cooling fan.	0	O
F54	A236	[Overload warning level]	30 ~ 150 [%]	This parameter sets the amount of current to issue an alarm signal at a relay or multi-function output terminal (see I54, I55). The set value is the percentage of H33- [Motor rated current].	150	O
F55	A237	[Overload warning time]	0 ~ 30 [Sec]	This parameter issues an alarm signal when the current greater than F54- [Overload warning level] flows to the motor for F55- [Overload warning time].	10	O

1) Set F30 to 2(User V/F) to display this parameter.
2) Set F50 to 1 to display this parameter.

Function Group 1

LED Display	Address for Communication	Parameter Name	Min/Max Range	Description	Factory Defaults	Adj. during Run
F56	A238	[Overload trip select]	0 ~ 1	This parameter turns off the drive output when motor is overloaded.	1	O
F57	A239	[Overload trip level]	30 ~ 200 [%]	This parameter sets the amount of overload current. The value is the percentage of H33- [Motor rated current].	180	O
F58	A23A	[Overload trip time]	0 ~ 60 [Sec]	This parameter turns off the drive output when the F57- [Overload trip level] of current flows to the motor for F58- [Overload trip time].	60	O
F59	A23B	[Stall prevention select]	0 ~ 7	This parameter stops accelerating during acceleration, decelerating during constant speed run and stops decelerating during deceleration. During decel / During constant run / During accel Bit 2 / Bit 1 / Bit 0 0: - - - 1: - - ✓ 2: - ✓ - 3: - ✓ ✓ 4: ✓ - - 5: ✓ - ✓ 6: ✓ ✓ - 7: ✓ ✓ ✓	0	X
F60	A23C	[Stall prevention level]	30 ~ 200 [%]	This parameter sets the amount of current to activate stall prevention function during Accel, Constant or decel run. The set value is the percentage of the H33- [Motor rated current].	150	X
F61 1)	A23D	[When Stall prevention during deceleration, voltage limit select	0 ~ 1	In Stall prevention run during deceleration, if you want to limit output voltage, select 1		
F63	A23F	[Save up/down frequency select]	0 ~ 1	This parameter decides whether to save the specified frequency during up/down operation. When 1 is selected, the up/down frequency is saved in F64.	0	X
F64 2)	A240	[Save up/down frequency]		If 'Save up/down frequency' is selected at F63, this parameter saves the frequency before the drive stops or decelerated.	0.00	X
F65	A241	[Up-down mode select]	0 ~ 2	We can select up-down mode among three thing 0: Increases goal frequency as a standard of Max. frequency/Min. frequency 1: Increases as many as step frequency according to edge input 2: Available to combine 1 and 2	0	X
F66	A242	[Up-down step frequency]	0 ~ 400 [Hz]	In case of choosing F65 as a 1 or 2, it means increase or decrease of frequency according to up-down input	0.00	X
F70	A246	[Draw run mode select]	0 ~ 3	0: Drive doesn't run as a draw mode 1: V1(0~10V) input draw run 2: I(0~20mA) input draw run 3: V1(-10~10V) input draw run	0	X
F71	A247	[Draw rate]	0 ~ 100[%]	Sets rate of draw	0.00	O

1) It is indicated when setting bit 2 of F59 as 1 2) Set F63 to 1 to display this parameter.

Function Group 2

LED Display	Address for Communication	Parameter Name	Min/Max Range	Description	Factory Defaults	Adj. during Run
H0	A300	[Jump code]	0 ~ 95	Sets the code number to jump.	1	O
H1	A301	[Fault history 1]	-	Stores information on the types of faults, the frequency, the current and the Accel/Decel condition at the time of fault. The latest fault is automatically stored in the H 1- [Fault history 1].	nOn	-
H2	A302	[Fault history 2]	-		nOn	-
H3	A303	[Fault history 3]	-		nOn	-
H4	A304	[Fault history 4]	-		nOn	-
H5	A305	[Fault history 5]	-		nOn	-
H6	A306	[Reset fault history]	0 ~ 1	Clears the fault history saved in H 1-5.	0	O
H7	A307	[Dwell frequency]	0.1 ~ 400 [Hz]	When run frequency is issued, motor starts to accelerate after dwell frequency is applied to the motor during H8- [Dwell time]. [Dwell frequency] can be set within the range of F21- [Max frequency] and F23- [Start frequency].	5.00	X
H8	A308	[Dwell time]	0 ~ 10 [sec]	Sets the time for dwell operation.	0.0	X
H10	A30A	[Skip frequency select]	0 ~ 1	Sets the frequency range to skip to prevent undesirable resonance and vibration on the structure of the machine.	0	X
H11 1)	A30B	[Skip frequencylow limit 1]	0.1 ~ 400 [Hz]	Run frequency cannot be set within the range of H11 thru H16. The frequency values of the low numbered parameters cannot be set above those of the high numbered ones. Settable within the range of F21 and F23.	10.00	X
H12	A30C	[Skip frequency high limit 1]			15.00	X
H13	A30D	[Skip frequency low limit 2]			20.00	X
H14	A30E	[Skip frequency high limit 2]			25.00	X
H15	A30F	[Skip frequency low limit 3]			30.00	X
H16	A310	[Skip frequency high limit 3]			35.00	X
H17	A311	[S-Curve accel/ decel start side]	1 ~100 [%]	Set the speed reference value to form a curve at the start during accel/decel. If it is set higher, linear zone gets smaller.	40	X
H18	A312	[S-Curve accel/ decel end side]	1 ~ 100 [%]	Set the speed reference value to form a curve at the end during accel/decel. If it is set higher, linear zone gets smaller.	40	X
H19	A313	[Input/output phase loss protection select]	0 ~ 3	0 Disabled; 1 Output phase protection; 2 Input phase protection; 3 Input/output phase protection	0	O
H20	A314	[Power On Start select]	0 ~ 1	This parameter is activated when drv is set to 1 or 2 (Run/Stop via Control terminal). Motor starts acceleration after AC power is applied while FX or RX terminal is ON.	0	O
H21	A315	[Restart after fault reset selection]	0 ~ 1	This parameter is activated when drv is set to 1 or 2 (Run/Stop via Control terminal). Motor accelerates after the fault condition is reset while the FX or RX terminal is ON.	0	O

1) only displayed when H10 is set to 1. # H17, H18 are used when F2, F3 are set to 1 (S-curve)

Function Group 2

LED Display	Address for Communication	Parameter Name	Min/Max Range	Description	Factory Defaults	Adj. during Run
H22 [1]	A316	[Speed Search Select]	0 ~ 15	This parameter is active to prevent any possible fault when the drive outputs its voltage to the running motor.		

	1. H20- [Power on start]	2. Restart after instant power failure	3. Operation after fault	4. Normal accel
0	-	-	-	-
1	-	-	-	✓
2	-	-		-
3	-	-	✓	✓
4	-	✓	-	-

	1. H20- [Power on start]	2. Restart after instant power failure	3. Operation after fault	4. Normal accel
	Bit 3	Bit 2	Bit 1	Bit 0
5	-	✓	-	✓
6	-	✓	✓	-
7	-	✓	✓	✓
8	✓	-	-	-
9	✓	-	-	✓
10	✓	-	✓	-
11	✓	-	✓	✓
12	✓	✓	-	-
13	✓	✓	-	✓
14	✓	✓	✓	-
15	✓	✓	✓	✓

LED Display	Address for Communication	Parameter Name	Min/Max Range	Description	Factory Defaults	Adj. during Run
H23	A317	[Current level during Speed search]	80 ~ 200 [%]	This parameter limits the amount of current during speed search. The set value is the percentage of the H33- [Motor rated current].	100	O
H24	A318	[P gain during Speed search]	0 ~ 9999	It is the Proportional gain used for Speed Search PI controller.	100	O
H25	A319	[I gain during speed search]	0 ~ 9999	It is the Integral gain used for Speed search PI controller.	200	O
H26	A31A	[Auto Restart time]	0 ~ 10	This parameter sets the number of restart tries after a fault occurs. Auto Restart is deactivated if the fault outnumbers the restart tries. This function is active when [drv] is set to 1 or 2 {Run/Stop via control terminal}. Deactivated during active protection function (OHT, LVT, EXT, HWT etc.).	0	O
H27	A31B	[Auto Restart time]	0 ~ 60 [sec]	This parameter sets the time between restart tries.	1.0	O
H30	A31E	[Motor type select]	0.2 ~ 22.0	0.2 ~ 22.0 / 0.2kW ~ 22.0kW	7.5 [2]	X
H31	A31F	[Number of motor poles]	2 ~ 12	This setting is displayed via rPM in drive group.	4	X

1) Normal acceleration has first priority. Even though #4 is selected along with other bits, Drive performs Speed search #4.
2) H30 is preset based on drive rating.

Function Group 2

LED Display	Address for Communication	Parameter Name	Min/Max Range	Description	Factory Defaults	Adj. during Run
H32	A320	[Rated slip frequency]	0 ~ 10 [Hz]	$fs = fr - \left[\frac{rpm \times p}{120}\right]$ Where, fs = Rated slip frequency fr = Rated frequency rpm = Motor nameplate RPM p = Number of Motor poles	2.33 1)	X
H33	A321	[Motor rated current]	0.5 ~ 150 [A]	Enter motor rated current on the nameplate.	26.3	X
H34	A322	[No load motor current]	0.1 ~ 50 [A]	Enter the current value detected when the motor is rotating in rated rpm after the load connected to the motor shaft is removed. Enter the 50% of the rated current value when it is difficult to measure H34 - [No load motor current].	11	X
H36	A324	[Motor efficiency]	50 ~ 100 [%]	Enter the motor efficiency (see motor nameplate).	87	X
H37	A325	[Load inertia rate]	0 ~ 2	Select one of the following according to motor inertia. 0 Less than 10 times 1 About 10 times 2 More than 10 times	0	X
H39	A327	[Carrier frequency select]	1 ~ 15 [kHz]	This parameter affects the audible sound of the motor, noise emission from the drive, drive temp, and leakage current. If the set value is higher, the drive sound is quieter but the noise from the drive and leakage current will become greater.	3	O
H40	A328	[Control mode select]	0 ~ 3	0 {Volts/frequency control} 1 {Slip compensation control} 3 {Sensorless vector control}	0	X
H41	A329	[Auto tuning]	0 ~ 1	If this parameter is set to 1, it automatically measures parameters of the H42 and H44.	0	X
H42	A32A	[Stator resistance (Rs)]	0 ~ 28 [Ω]	This is the value of the motor stator resistance.	-	X
H44	A32C	[Leakage inductance (Lσ)]	0 ~ 300.0 [mH]	This is leakage inductance of the stator and rotor of the motor.	-	X
H45 2)	A32D	[Sensorless P gain]	0 ~ 32767	P gain for sensorless control	1000	O
H46	A32E	[Sensorless I gain]		I gain for sensorless control	100	O
H47	A32F	[Sensorless torque limit]	100 ~ 220 [%]	Limits output torque in sensorless mode.	180.0	X
H48	A330	PWM mode select	0 ~ 1	If you want to limit a drive leakage current, select 2 phase PWM mode. 0 Normal PWM mode 1 2 phase PWM mode	0	X
H49	A331	PID select	0 ~ 1	Selects whether using PID control or not	0	X

1) H32 ~ H36 factory default values are set based on OTIS-LG motor.
2) Set H40 to 3 (Sensorless vector control) to display this parameter.

Function Group 2

LED Display	Address for Communication	Parameter Name	Min/Max Range	Description		Factory Defaults	Adj. during Run
H50 1)	A332	[PID F/B select]	0 ~ 1	0	Terminal I input (0 ~ 20mA)	0	X
				1	Terminal V1 input (0 ~ 10V)		
H51	A333	[P gain for PID]	0 ~ 999.9 [%]	This parameter sets the gains for the PID controller.		300.0	O
H52	A334	[Integral time for PID	0.1 ~ 32.0 [sec]			1.0	O
H53	A335	[Differential time for PID (D gain)]	0 ~ 30.0 [sec]			0.0	O
H54	A336	[PID control mode select]	0 ~ 1	Selects PID control mode		0	X
				0	Normal PID control		
				1	Process PID control		
H55	A337	[PID output frequency high limit]	0.1 ~ 400 [Hz]	This parameter limits the amount of the output frequency through the PID control. The value is settable within the range of F21 ? [Max frequency] and F23 - [Start frequency].		60.00	O
H56	A338	[PID output frequency low limit]	0 ~ 400 [Hz]			0.50	O
H57	A339	[PID standard value select]	0 ~ 4	Selects PID standard value. Standard value is indicated in "rEF" of drive group.		0	X
				0	Loader digital setting 1		
				1	Loader digital setting 2		
				2	V1 terminal setting 2: 0~10V		
				3	I terminal setting: 0~20mA		
				4	Setting as a RS-485 communication		
H58	A33A	PID control unit select	0 ~ 1	Selects a unit of the standard value or feedback amount.		0	X
				0	Frequency[Hz]		
				1	Percentage[%]		
H59	A33B	PID Output Inverse	0 ~ 1	Select the output direction of PID control.		0	X
				0	No		
				1	Yes		
H60	A33C	[Self-diagnostic select]	0 ~ 3	0	Self-diagnostic disabled	0	X
				1	IGBT fault/Ground fault		
				2	Output phase short & open/ Ground fault		
				3	Ground fault (This setting is unable when more than 11kW)		
H61 2)	A33D	[Sleep delay time]	0 ~ 2000[s]	Sets a sleep delay time in PID drive.		60.0	X
H62	A33E	[Sleep frequency]	0 ~ 400[Hz]	Sets a sleep frequency when executing a sleep function in PID			
				Control drive.		0.00	O
				You can't set more than Max. frequency(F21)			
H63	A33F	[Wake up level]	0 ~ 100[%]	Sets a wake up level in PID control drive.		35.0	O
H64	A340	[KEB drive select]	0 ~ 1	Sets KEB drive.		0	X
H65	A341	[KEB action start level]	110 ~ 140 [%]	Sets KEB action start level according to level.		125.0	X
H66	A342	[KEB action stop level]	110 ~ 145 [%]	Sets KEB action stop level according to level.		130.0	X
H67	A343	[KEB action gain]	1 ~ 20000	Sets KEB action gain.		1000	X

1) Set H49 to 1 (PID control) to display this parameter.
2) Set H49 as a 1
3): it is indicated when setting H64(KEB drive select) as a 1 (KEB does not operate when cut power after loading ting input (about 10%).

Function Group 2

LED Display	Address for Communication	Parameter Name	Min/Max Range	Description		Factory Defaults	Adj. during Run
H70	A346	[Frequency reference for accel/Decel]	0 ~ 1	0	Based on Max freq (F21)	0	X
				1	Based on Delta freq.		
H71	A347	[Accel/Decel time scale]	0 ~ 2	0	Settable unit: 0.01 second.	1	O
				1	Settable unit: 0.1 second.		
				2	Settable unit: 1 second.		
H72	A348	[Power on display]	0 ~15	This parameter selects the parameter to be displayed on the keypad when the input power is first applied.		0	O
				0	Frequency command		
				1	Accel time		
				2	Decel time		
				3	Drive mode		
				4	Frequency mode		
				5	Multi-Step frequency 1		
				6	Multi-Step frequency 2		
				7	Multi-Step frequency 3		
				8	Output current		
				9	Motor rpm		
				10	Drive DC link voltage		
				11	User display select (H73)		
				12	Fault display		
				13	Direction of motor rotation select		
				14	Output current 2		
				15	Motor rpm 2		
				16	Drive DC link voltage 2		
				17	User display select 2		
H73	A349	[Monitoring item select]	0 ~ 2	One of the following can be monitored via vOL - [User display select]		0	O
				0	Output voltage [V]		
				1	Output power [kW]		
				2	Torque [kgf, m]		
H74	A34A	[Gain for motor rpm display]	1 ~ 1000 [%]	This parameter is used to change the motor rotating speed (r/min) to mechanical speed (m/mi) and display it.		100	O
H75	A34B	[DB resistor operating rate limit select]	0 ~ 1	0	Unlimited	1	O
				1	Use DB resistor for the H76 set time.		
H76	A34C	[DB resistor operating rate]	0 ~ 30 [%]	Set the percent of DB resistor operating rate to be activated during one sequence of operation.		10	O
H77 1)	A34D	[Cooling fan control]	0 ~ 2	0	Always ON	0	O
				1	Keeps ON when its temp is higher than drive protection limit temp. Activated only during operation when its temp is below that of drive protection limit.		
				2	Regardless of the operation fan is active when is temp is higher than drive protection limit temp.		

1) Exception: Since SV004iG5A-2/SV004iG5A-4 is Natural convection type, this code is hidden.

Function Group 2

LED Display	Address for Communication	Parameter Name	Min/Max Range	Description		Factory Defaults	Adj. during Run
H78	A34E	[Operating method select when cooling fan malfunctions	0 ~ 1	0	Continuous operation when cooling fan malfunctions.	0	O
				1	Operation stopped when cooling fan malfunctions.		
H79	A34F	[S/W version]	0 ~ 10.0	This parameter displays the drive software version.		1.0	X
H81 1)	A351	[2nd motor Accel time]	0 ~ 6000 [eec]	This parameter actives when the selected terminal is ON after I17-I24 is set to 12 {2nd motor select}.		5.0	O
H82	A352	[2nd motor decel time]				10.0	O
H83	A353	[2nd moto base frequency]	30 ~ 400 [Hz]			60.00	X
H84	A354	[2nd motor V/F pattern]	0 ~ 2			0	X
H85	A355	[2nd motor forward torque boost]	0 ~ 15 [%]			5	X
H86	A356	[2nd motor reverse torque boost]				5	X
H87	A347	[2nd motor stall prevention level]	30 ~ 150 [%]			150	X
H88	A358	[2nd motor Electronic thermal level for 1 min]	50 ~ 200 [%]			150	O
H89	A359	[2nd motor Electronic thermal level for continuous]	50 ~ 150 [%]			100	O
H90	A35A	[2nd motor rated current]	0.1 ~ 100 [A]			26.3	X
H91 2)	A35B	[Parameter read]	0 ~ 1	Copy the parameters from drive and save them into remote loader.		0	X
H92	A35C	[Parameter write]	0 ~ 1	Copy the parameters from remote loader and save them into drive.		0	X
H93	A35D	[Parameter initialize]	0 ~ 5	This parameter is used to initialize parameters back to the factory default value.		0	X
				0	-		
				1	All parameter groups are initialized to factory default value.		
				2	Only drive group is initialized.		
				3	Only function group 1 is initialized.		
				4	Only function group 2 is initialized.		
				5	Only I/O group is initialized.		
H94	A35E	[Password register]	0 ~ FFFF	Password for H95-[Parameter lock]. Set as hexa value.		0	O
H95	A35F	[Parameter lock]	0 ~ FFFF	This parameter is able to lock or unlock parameters by typing password registered in H94.		0	O
				UL (Unlock)	Parameter change enable		
				L (Lock)	Parameter change disable		

1) It is indicated when choosing I17~I24 as a 12 (2nd motor select).
2) H91,H92 parameters are displayed when Remote option is installed.

Input/Output Group

LED Display	Address for Communication	Parameter Name	Min/Max Range	Description		Factory Defaults	Adj. during Run
I0	A400	[Jump code]	0 ~ 87	Sets the code number to jump.		1	O
I2	A402	[NV input Min voltage]	0 ~ 10 [V]	Sets the minimum voltage of the NV (-10V~0V) input..		0.00	O
I3	A403	[Frequency corresponding to I2]	0 ~ 400 [Hz]	Sets the drive output minimum frequency at minimum voltage of the NV input.		0.00	O
I4	A404	[NV input Max voltage]	0 ~ 10 [V]	Sets the maximum voltage of the NV input.		10.0	O
I5	A405	[Frequency corresponding to I4]	0 ~ 400 [Hz]	Sets the drive output maximum frequency at maximum voltage of the NV input		60.00	O
I6	A406	[Filter time constant for V1 input]	0 ~ 9999	Adjusts the responsiveness of V1 input (0 ~ +10V)		10	O
I7	A407	[V1 input Min voltage]	0 ~10 [V]	Sets the minimum voltage of the V1 input.		0	O
I8	A408	[Frequency corresponding to I7]	0 ~ 400 [Hz]	Sets the drive output minimum frequency at minimum voltage of the V1 input.		0.00	O
I9	A409	V1 input Max voltage]	0 ~ 10 [V]	Sets the maximum voltage of the V1 input.		10	O
I10	A40A	[Frequency corresponding to I9]	0 ~ 400 [Hz]	Sets the drive output maximum frequency at maximum voltage of the V1 input.		60.00	O
I11	A40B	[Filter time constant for I input]	0 ~ 9999	Sets the input section's internal filter constant for I input.		10	O
I12	A40C	[I input Min current]	0 ~ 20 [mA]	Sets the minimum current of I input.		4.00	O
I13	A40D	[Frequency corresponding to I12]	0 ~ 400 [Hz]	Sets the drive output minimum frequency at minimum current of I input.		0.00	O
I14	A40E	[I input Max current]	0 ~ 20 [mA]	Sets the Maximum current of I input.		20.00	O
I15	A40F	[Frequency corresponding to I14]	0 ~ 400 [Hz]	Sets the drive output maximum frequency at maximum current of I input.		60.00	O
I16	A410	[Criteria for analog Input Signal loss]	0 ~ 2	0	Disabled	0	O
				1	activated below half of set value.		
				2	activated below set value.		
I17	A411	[Multi-function input terminal P1 define]	0 ~ 27	0	Forward run command	0	O
				1	Reverse run command		
I18	A412	[Multi-function input terminal P2 define]		2	Emergency stop Trip	1	O
				3	Reset when a fault occurs {RST}		
I19	A413	[Multi-function input terminal P3 define]		4	Jog operation command	2	O
				5	Multi-Step freq - Low		
I20	A414	[Multi-function input terminal P4 define]		6	Multi-Step freq - Mid	3	O
				7	Multi-Step freq - High		

* See "Chapter 14 Troubleshooting and maintenance" for External trip A/B contact.
* Each multi-function input terminal must be set differently.

Input/Output Group

LED Display	Address for Communication	Parameter Name	Min/Max Range	Description			Factory Defaults	Adj. during Run
I21	A415	[Multi-function input terminal P5 define]	0 ~ 27	8	Multi accel/Decel - Low		4	0
				9	Multi accel/Decel - Mid			
I22	A416	[Multi-function input terminal P6 define]		10	Multi accel/Decel - High		5	0
				11	DC brake during stop			
I23	A417	[Multi-function input terminal P7 define]		12	2nd motor select		6	0
				13	-Reserved-			
I24	A418	[Multi-function input terminal P8 define]		14	-Reserved-		7	0
				15	Up-down	Frequency increase (UP) command		
				16		Frequency decrease command (DOWN)		
				17	3-wire operation			
				18	External trip: A Contact (EtA)			
				19	External trip: B Contact (EtB)			
				20	Self-diagnostic function			
				21	Change from PID operation to V/F operation			
				22	2nd source			
				23	Analog hold			
				24	Accel/Decel disable			
				25	Up/down Save Freq. Initialization			
				26	JOG-FX			
				27	JOG-RX			

LED Display	Address for Communication	Parameter Name	Min/Max Range	Description								Factory Defaults	Adj. during Run
I25	A419	[Input terminal status display]		BIT7	BIT6	BIT5	BIT4	BIT3	BIT2	BIT1	BIT0	0	0
				P8	P7	P6	P5	P4	P3	P2	P1		
I26	A41A	[Output terminal status display]		BIT1				BIT0				0	0
				3AC				MO					

LED Display	Address for Communication	Parameter Name	Min/Max Range	Description	Factory Defaults	Adj. during Run
I27	A41B	[Filtering time constant for Multi-function Input terminal]	1 ~ 15	If the value is set higher, the responsiveness of the Input terminal is getting slower.	4	0
I30	A41E	[Multi-step frequency 4]	0 ~ 400 [Hz]	It cannot be set greater than F21 - [Max frequency].	30.00	0
I31	A41F	[Multi-step frequency 5]			25.00	0
I32	A420	[Multi-step frequency 6]			20.00	0
I33	A421	[Multi-step frequency 7]			15.00	0
I34	A422	[Multi-acce time 1]	0 ~ 6000 [sec]		3.0	0
I35	A423	[Multi-decel time 1]			3.0	
I36	A424	[Multi-accel time 2]			4.0	

Input/Output Group

LED Display	Address for Communication	Parameter Name	Min/Max Range	Description	Factory Defaults	Adj. during Run
I37	A425	[Multi-Decel time 2]	0 ~ 6000 [sec]		4.0	
I38	A426	[Multi-Accel time 3]			5.0	
I39	A427	[Multi-Decel time 3]			5.0	
I40	A428	[Multi-Accel time 4]			6.0	
I41	A429	[Multi-Decel time 4]			6.0	
I42	A42A	[Multi-Accel time 5]			7.0	
I43	A42B	[Multi-Decel time 5]			7.0	
I44	A42C	[Multi-Accel time 6]			8.0	
I45	A42D	[Multi-Decel time 6]			8.0	
I46	A42E	[Multi-Accel time 7]			9.0	
I47	A42F	[Multi-Decel time 7]			9.0	
I50	A432	[Analog output item select]	0 ~ 3	Output item: Output to 10[V] (200V / 400V) 0: Output freq. — Max frequency 1: Output current — 150% 2: Output voltage — AC 282V / AC 564V 3: Drive DC link voltage — DC 400V / DC 800V	0	O
I51	A433	[Analog output level adjustment]	10 ~ 200% [%]	Based on 10V.	100	O
I52	A434	[Frequency detection level]	0 ~ 400 [Hz]	Used when I54 or I55 is set to 0-4. Cannot be set higher than F21.	30.00	O
I53	A435	[Frequency detection			10.00	O
I54	A436	bandwidth] [Multi-function output terminal select]	0 ~ 19	0: FDT-1 1: FDT-2 2: FDT-3	12	O
I55	A437	[Multi-function relay select]		3: FDT-4 4: FDT-5 5: Overload (OLt) 6: Drive overload (IOLt) 7: Motor stall (STALL) 8: Over voltage trip (Ovt) 9: Low voltage trip (Lvt)	17	

Input/Output Group

LED Display	Address for Communication	Parameter Name	Min/Max Range	Description				Factory Defaults	Adj. during Run
I55	A437	[Multi-function relay select]	0 ~ 19	10	Drive overheat (OHt)			17	O
				11	Command loss				
				12	During Run				
				13	During Stop				
				14	During constant run				
				15	During speed searching				
				16	Wait time for run signal input				
				17	Multi-function relay select				
				18	Warning for cooling fan trip				
				19	Brake signal select				
I56	A438	[Fault relay output]	0 ~ 7		When setting the H26-[Number of auto restart try]	When the trip other than low voltage trip occurs	When the low voltage trip occurs	2	O
					Bit 2	Bit 2	Bit 2		
				0	-	-	-		
				1	-	-	✓		
				2	-	✓	-		
				3	-	✓	✓		
				4	✓	-	-		
				5	✓	-	✓		
				6	✓	✓	-		
				7	✓	✓	✓		
I57	A439	[Output terminal select when communication error occurs]	0 ~ 3		Multi-function relay	Multi-function output terminal		0	O
					Bit 1	Bit 0			
				0	-	-			
				1	-	✓			
				2	✓	-			
				3	✓	✓			
I59	A43B	[Communication protocol select]	0 ~ 1	Set communication protocol.				0	X
				0	Modbus RTU				
				1	LS BUS				
I60	A43C	[Drive number]	1 ~ 250	Set for RS485 communication				1	O
I61	A43D	[Baud rate]	0 ~ 4	Select the baud rate of the RS485				3	O
				0	1200 [bps]				
				1	2400 [bps]				
				2	4800 [bps]				
				3	9600 [bps]				
				4	19200 [bps]				
I62	A43E	[Drive mode select after loss of frequency command]	0 ~ 3	It is used when freq command is given via V1 /I terminal or RS485.				0	0
				0	Continuous operation at the frequency before its command is lost.				
				1	Free run stop (Output cut-off)				
				2	Decel to stop				
				3	Lose preset				

Input/Output Group

LED Display	Address for Communication	Parameter Name	Min/Max Range	Description	Factory Defaults	Adj. during Run
I63	A43F	[Wait time after loss of frequency command]	0.1 ~ 120 [sec]	This is the time drive determines whether there is the input frequency command or not. If there is no frequency command input during this time, drive starts operation via the mode selected at I62.	1.0	O
I64	A440	[Communication time setting]	2~ 100 [ms]	Frame communication time	5	O
I65	A441	[Parity/stop bit setting]	0 ~ 3	When the protocol is set, the communication format can be set. 0 Parity: none, Stop bit: 1 1 Parity: none, Stop bit: 2 2 Parity: even, Stop bit: 1 3 Parity: odd, Stop bit: 1	0	O
I66	A442	[Read address register 1]	0 ~ 42239	The user can register up to 8 discontinuous addresses and read them all with one read command.	5	O
I67	A443	[Read address register 2]			6	
I68	A444	[Read address register 3			7	
I69	A445	[Read address register 4]			8	
I70	A446	[Read address register 5]			9	
I71	A447	[Read address register 6]			10	
I72	A448	[Read address register 7]			11	
I73	A449	[Read address register 8]			12	
I74	A44A	[Write address register 1]	0 ~ 42239	The user can register up to 8 discontinuous addresses and write them all with one write command	5	O
I75	A44B	[Write address register 2]			6	
I76	A44C	[Write address register 3]			7	
I77	A44D	[Write address register 4]			8	
I78	A44E	[Write address register 5]			5	
I79	A44F	[Write address register 6]			6	
I80	A450	[Write address register 7]			7	
I81	A451	[Write address register 8]			8	
I82 1)	A452	[Brake open current]	0 ~ 180 [%]	Sets current level to open the brake. It is set according to H33's (motor rated current) size	50.00	O

1) It is indicated when choosing I54~I55 as a 19 (Brake signal).

LED Display	Address for Communication	Parameter Name	Min/Max Range	Description	Factory Defaults	Adj. during Run
I83	A453	[Brake open delay time]	0 ~ 10 [s]	Sets Brake open dely time.	1.00	X
I84	A454	[Brake open FX frequency]	0 ~ 400 [Hz]	Sets FX frequency to open the brake	1.00	X
I85	A455	[Brake open RX frequency]	0 ~ 400 [Hz]	Sets RX frequency to open the brake	1.00	X
I86	A456	[Brake close delay time]	0 ~ 19 [s]	Sets delay time to close the brake	1.00	X
I87	A457	[Brake close frequency	0 ~ 400 [Hz]	Sets frequency to close the brake	2.00	X

Protective Functions

Keypad Display	Protective Functions	Descriptions
OCt		The drive turns off its output when the output current of the drive flows more than 200% of the drive rated current.
GFt		The drive turns off its output when a ground fault occurs and the ground fault current is more than the internal setting value of the drive
IOL		The drive turns off its output when the output current of the drive flows more than the rated level (150% for 1 minute).
OLt		The drive turns off its output if the output current of the drive flows at 150% of the drive rated current for more than the current limit time (1min).
OHt		The drive turns off its output if the heat sink overheats due to a damaged cooling fan or an alien substance in the cooling fan by detecting the temperature of the heat sink.
POt		The drive turns off its output when the one or more of the output (U, V, W) phase is open. The drive detects the output current to check the phase loss of the output.
Out		The drive turns off its output if the DC voltage of the main circuit increases higher than 400V when the motor decelerates. This fault can also occur due to a surge voltage generated at the power supply system.
Lut		The drive turns off its output if the DC voltage is below 180V because insufficient torque or overheating of the motor can occur when the input voltage of the drive drops.
EtH		The internal electronic thermal of the drive determines the overheating of the motor. If the motor is overloaded, the drive turns off the output. The drive cannot protect the motor when driving a motor having more than 4 poles or multi motors.
COL		Drive output is blocked when one of R, S, T is open or the electrolytic capacitor needs to be replaced.
FLtL		Displayed when IGBT damage, output phase short, output phase ground fault or output phase open occurs.
EEP		Displayed when user-setting parameters fails to be entered into memory.
HW-t		Displayed when an error occurs in the control circuitry of the drive.
Err		Displayed when the drive cannot communicate with the keypad.
rErr		Displayed when the drive and the remote keypad do not communicate with each other. It does not stop drive operation.
COn		Displayed after the drive resets the keypad when a keypad error occurs and this ....
FAn		Displayed when a fault condition occurs in the drive cooling fan.
ESt		Used for the emergency stop of the drive. The drive instantly turns off the output when the EST terminal is turned on. Caution: The drive starts to regular operation when turning off the EST terminal while FX or RX terminal is ON.
EtA		When multi-function input terminal (I20-I24) is set to 19 {External fault signal input A: (Normal Open Contact)}, the drive turns off the output.
Etb		When multi-function input terminal (I20-I24) is set to 19 {External fault signal input B: (Normal Close Contact)}, the drive turns off the output.
_ _ L		VWhen drive operation is set via analog input (0-10V or 0-20mA input) or option (RS-485) and no signal is applied, operation is done according to the method set in I62 (Operating method when the frequency reference is lost).

Fault Remedy

Keypad Display	Cause	Remedy
OCt Overcurrent	Caution: When an overcurrent fault occurs, operation must be started after the cause is removed to avoid damage to IGBT inside the drive.	
	Accel/Decel time is too short compared to the GD^2 of the load. Load is greater than the drive rating. Drive output is issued when the motor is free running. Output short circuit or ground fault has occurred. Mechanical brake of the motor is operating too fast.	- Increase the Accel/Decel time. - Replace the drive with appropriate capacity. - Resume operation after stopping the motor or use H22 (Speed search). - Check output wiring. - Check the mechanical brake.
GFt Ground Fault Current	Ground fault has occurred at the output wiring of the drive. The insulation of the motor is damaged due to heat.	- Check the wiring of the output terminal. - Replace the motor.
IOL Drive Overload	Load is greater than the drive rating.	- Upgrade the capacity of motor and drive or reduce the load weight. - Reduce torque boost scale.
OLt Overload Trip	Torque boost scale is set too large.	
OHt Heat Sink Overheat	Cooling system has faults. An old cooling fan is not replaced with a new one. Ambient temperature is too high.	- Check for alien substances clogged in the heat sink. - Replace the old cooling fan with a new one. - Keep ambient temperature under 50°C.
POt Output Phase Loss	Faulty contact of magnetic switch at output. Faulty output wiring.	- Make connection of magnetic switch at output of the drive securely. - Check output wiring.
FAn Cooling Fan Fault	An alien substance is clogged in a ventilating slot. Drive has been in use without changing a cooling fan.	- Check the ventilating slot and remove the clogged substances. - Replace the cooling fan.
Out Over Voltage	Decel time is too short compared to the GD^2 of the load. Regenerative load is at the drive output. Line voltage is too high.	- Increase the decel time. - Use dynamic brake unit. - Check whether line voltage exceeds its rating.
Lut Low Voltage	Line voltage is low. Load larger than line capacity is connected to line (ex: welding machine, motor with high starting current connected to the commercial line). Faulty magnetic switch at the input side of the drive.	- Check whether line voltage is below its rating. - Check the incoming AC line. Adjust the line capacity corresponding to the load.
EtH Electronic Thermal	Motor has overheated. Load is greater than drive rating. ETH level is set too low. Drive capacity is incorrectly selected. Drive has been operated at low speed for too long.	- Change a magnetic switch. - Reduce load weight and operating duty. - Change drive with higher capacity. - Adjust ETH level to an appropriate level. - Select correct drive capacity. - Install a cooling fan with a separate power supply.
EtA External Fault A Contact Input	The terminal set to "18 (External fault- A)" or "19 (External fault-B)" in I20-I24 in I/O group is ON.	- Eliminate the cause of fault at circuit connected to external fault terminal or cause of external fault input.
Etb External Fault B Contact Input		
_ _ L Operating Method when the Frequency Command is Lost	No frequency command is applied to V1 and I.	- Check the wiring of V1 and I and frequency reference level.
rErr Remote Keypad Communication Error	Communication error between drive keypad and remote keypad.	- Check for connection of communication line and connector.
EEP HWt Err COM	- EEP: Parameter save error - HWT: Hardware fault - Err: Communication Error - COM: Keypad error	- Contact your LSIS sales distributor.

FUTURING SMART ENERGY

We open up a brighter future through
efficient and convenient energy solutions.

Safety Instructions

- For your safety, please read user's manual thoroughly before operating.
- Contact the nearest authorized service facility for examination, repair, or adjustment.
- Please contact qualified service technician when you need maintenance.
  Do not disassemble or repair by yourself!
- Any maintenance and inspection shall be performed by the personnel having expertise concerned.

- According to The WEEE Directive, please do not discard the device with your household waste.

LS IS

www.lsis.com

■ Head Quarter

LS Yongsan Tower, 92, Hangang-daero, Yongsan-gu, Seoul, 04386, Korea
Tel : 82-2-2034-4286 Fax : 82-2-2034-4648 E-mail : PLCSales@lsis.com

■ Overseas Subsidiaries

- LSIS(Shanghai) Co., Ltd. /CHINA
  Tel : 86-21-5237-9977(609) Fax : 86-21-5237-7189
- LSIS(Dalian) Co., Ltd. (Dalian, China)
  Tel: 86-411-8730-7510 Fax: 86-411-8730-7560 E-Mail: jiheo@lsis.com
- LSIS(Wuxi) Co., Ltd. (Wuxi, China)
  Tel: 86-510-8534-6666-8005 Fax: 86-510-8534-4078 E-Mail: sunhwank@lsis.com
- LS VINA Industrial Systems Co., Ltd. (Hanoi, Vietnam)
  Tel: 84-24-3882-0222 Fax: 84-24-3882-0220 E-Mail: jhchoi4@lsis.com
- LSIS Middle East FZE (Dubai, U.A.E.)
  Tel: 971-4-886-5360 Fax: 971-4-886-5361 E-Mail: hschoib@lsis.com
- LSIS Europe B.V. (Amsterdam, Netherlands)
  Tel: 31-20-654-1420 Fax: 31-20-654-1429 E-Mail: htha@lsis.com
- LSIS Japan Co., Ltd. (Tokyo, Japan)
  Tel: 81-3-6268-8241 Fax: 81-3-6268-8240 E-Mail: jschuna@lsis.com
- LSIS USA Inc. (Chicago, U.S.A.)
  Tel: 1-800-891-2941 Fax: 1-847-383-6543 E-Mail: sales.us@lsis.com

■ Overseas Branches

- LSIS Shanghai Office (China)
  Tel: 86-21-5237-9977(609) Fax: 86-21-5237-7189 E-Mail: ygeo@lsis.com
- LSIS Beijing Office (China)
  Tel: 86-10-5761-3127 Fax: 86-10-5761-3128 E-Mail: sson@lsis.com
- LSIS Guangzhou Office (China)
  Tel: 86-20-8326-6784 Fax: 86-20-8326-6287 E-Mail: sojhtroh@lsis.com
- LSIS Qingdao Office (China)
  Tel: 86-532-8501-6058 Fax: 86-532-8501-6057 E-Mail: sson@lsis.com
- LSIS Chengdu Office (China)
  Tel: 86-28-8670-3200 Fax: 86-28-8670-3203 E-Mail: yangcf@lsis.com
- LSIS ShenYang Office (China)
  Tel:86-24-2321-9050 Fax: 86-24-8386-7210 E-Mail: yangcf@lsis.com
- LSIS Jinan Office (China)
  Tel: 86-531-8699-7826 Fax: 86-531-8697-7628 E-Mail: yangcf@lsis.com
- LSIS Co., Ltd. Tokyo Office (Japan)
  Tel: 81-3-6268-8241 Fax: 81-3-6268-8240 E-Mail: jschuna@lsis.com
- LSIS Co., Ltd. Rep. Office (Vietnam)
  Tel: 84-28-3823-7890 E-Mail: sjbaik@lsis.com
- LSIS Moscow Office (Russia)
  Tel: 7-499-682-6130 E-Mail: jdpark1@lsis.com
- LSIS Jakarta Office (Indonesia)
  Tel: 62-21-2933-7614 E-Mail: dioh@lsis.com
- LSIS Bangkok Office (Thailand)
  Tel: 66-90-950-9683 E-Mail: sjleet@lsis.com

2019. 04

Specifications in this catalog are subject to change without notice due to continuous product development and improvement.